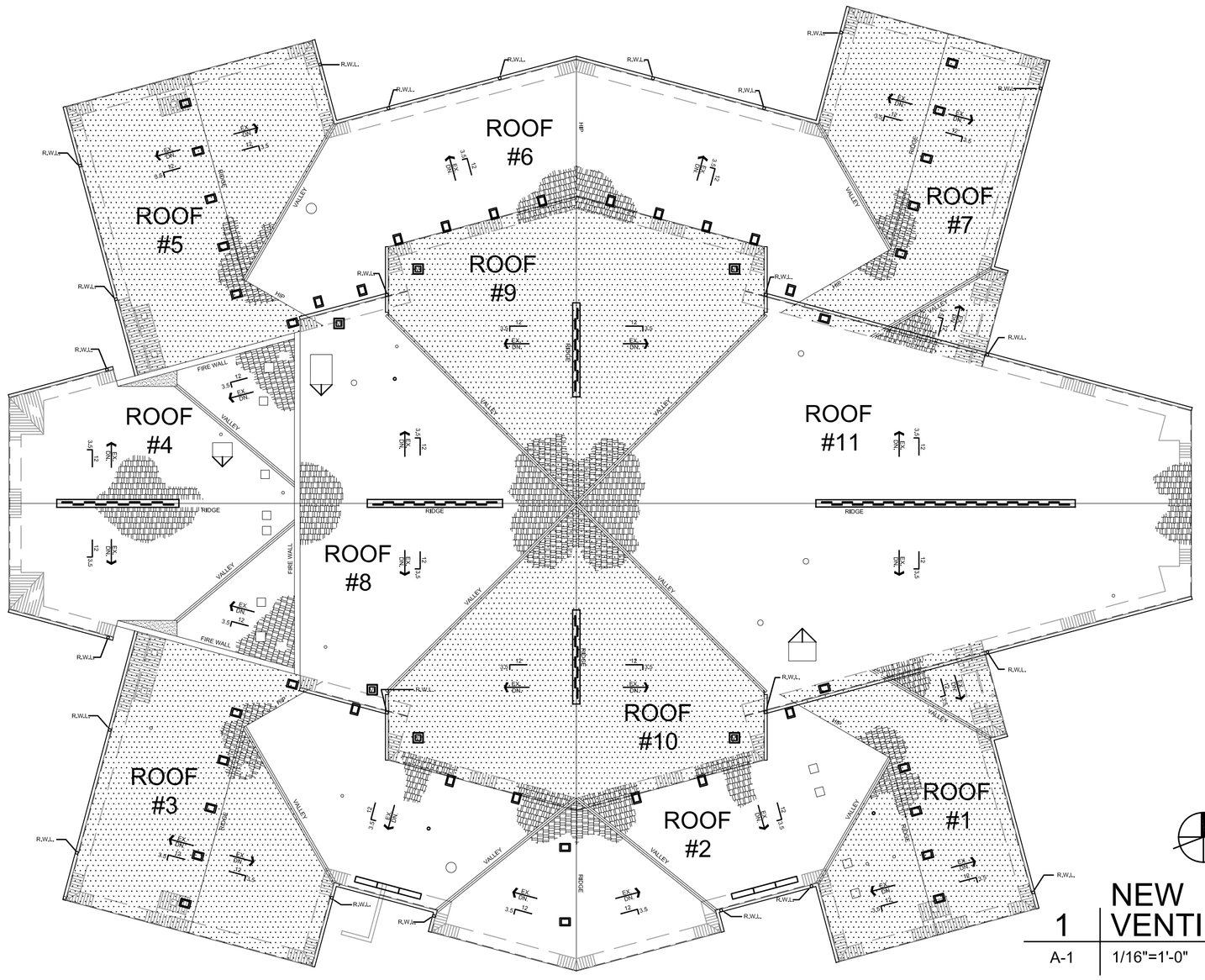

1 NEW VENTING PLAN
A-1 1/16"=1'-0"

GENERAL NOTES:

0. CONSTRUCTION TO CONFORM TO BRITISH COLUMBIA BUILDING CODE 2018.
1. CONTRACTOR AND SUB-TRADES TO REVIEW ALL DRAWINGS AND SPECIFICATIONS FOR TOTAL SCOPE OF WORK. REVIEW SPECIFICATIONS FOR ITEMS SUCH AS BUT NOT LIMITED TO WARRANTY AND SYSTEM REQUIREMENTS.
2. CONTRACTOR TO PROTECT ALL EXISTING BUILDING FINISHES AND EXISTING BUILDING EQUIPMENT TO REMAIN. RESTORE ANY DAMAGED FINISHES TO EXISTING CONDITION. PREPARE FOR NEW FINISHES WHERE SPECIFIED.
3. CONTRACTOR TO PROTECT ALL EXISTING SOFT/HARD LANDSCAPE TO REMAIN AND RE-STORE ANY DAMAGE FROM SITE WORK OR STAGING BEYOND SCOPE OF WORK SHOWN.
4. PROVIDE DAILY CLEANING TO AREA OF WORK FOR DURATION OF PROJECT AS THE BUILDING WILL BE OCCUPIED. WHEN PROJECT COMPLETE, PROVIDE FINAL CLEANING TO BUILDING EXTERIOR / LANDSCAPE AND ANY STAGING AREA WHERE WORK WAS PERFORMED TO MEET EXISTING BUILDING STANDARDS. AT LANDSCAPE LEVEL, PROVIDE MAGNETIC SWEEP AND CLEAN UP OF AREA. AT ROOF LEVEL INCLUDING EAVESTROUGHS, REMOVE ALL DEBRIS INCLUDING ITEMS SUCH AS BUT NOT LIMITED TO NAILS AND SHINGLE GRANULES.
5. REMOVE DEMOLITION/SCRAP MATERIALS AND DISPOSE OFF SITE AS REQUIRED WITH APPROPRIATE LEGAL DUMP SITE. STAGE BIN LOCATIONS AND TARPS AROUND SITE TO PROVIDE NEAT REMOVAL.
6. BIDDERS SHALL CONFIRM ALL CRITICAL DIMENSIONS ON SITE. ANY DIMENSIONS SHOWN ARE APPROXIMATE.
7. EXISTING ROOF ASSEMBLIES AND ROOF COMPONENT DEPTHS, DIMENSIONS AND PROFILES AS DEPICTED ARE APPROXIMATE ONLY. SITE VERIFY ALL CONDITIONS.
8. THE TERM "PROVIDE" SHALL MEAN "SUPPLY AND INSTALL".
9. CONTRACTOR TO PROVIDE SCAFFOLD, FALL PROTECTION, ANY HEATING AND HOARDING AS NECESSARY TO PERFORM THE WORK.
10. AS REQUIRED FOR PROPER WORK ACCESS, CONTRACTOR TO TRIM BACK EXISTING SHRUBS, HEDGES AND TREES ALONG PERIMETER OF BUILDING APPROXIMATELY 1'-0" AWAY FROM NEW WORK AREA.
11. REMOVE EXISTING ASPHALT SHINGLE ROOF ASSEMBLY, EPDM ROOF ASSEMBLY AND MODIFIED MEMBRANE ROOF ASSEMBLY INCLUDING UNDERLAYMENTS AND MISCELLANEOUS FLASHING (SUCH AS BUT NOT LIMITED TO CAP, REGLET AND STEP FLASHING) TO EXPOSE EXISTING ROOF SHEATHING. CLEAN AND PREPARE AREAS FOR NEW CONSTRUCTION. REFER TO SECTIONS AND DETAILS FOR ADDITIONAL DEMOLITION AND NEW CONSTRUCTION REQUIREMENTS.
12. EXISTING ROOF PROFILE / FORM (RIDGES, HIPS, AND VALLEYS) TO REMAIN WITH NEW ROOFING AND NEW PRE-FINISHED METAL FLASHING UNLESS NOTED OTHERWISE.
13. REMOVE EXISTING PRE-FINISHED METAL FASCIA, SOFFIT AND MISCELLANEOUS FLASHING. REMOVE EXISTING PRE-FINISHED METAL EAVESTROUGH AND DOWNSPOUTS. CLEAN AND PREPARE AREAS FOR NEW CONSTRUCTION. REFER TO SECTIONS AND DETAILS FOR ADDITIONAL DEMOLITION AND NEW CONSTRUCTION REQUIREMENTS.
14. EXISTING ROOF OVERHANG PROFILE (ROOF STRUCTURE) TO REMAIN WITH NEW FASCIA AND SOFFIT UNLESS NOTED OTHERWISE.
15. CONTRACTOR TO PROVIDE COMPATIBLE SEALANT WHERE SO SPECIFIED. SEALANT MUST BE APPLIED IN A NEAT WORKMANLIKE MANNER.
16. PROTECT ALL ITEMS TO BE REMOVED AND REINSTALLED OR SALVAGED FOR RETURN TO OWNER.
17. REMOVE, CLEAN AND REINSTALL ALL EXISTING ITEMS SUCH AS BUT NOT LIMITED TO DEVICES, PLATES, GRILLES, AND FIXTURES AT AREAS REQUIRING NEW FINISHES. NEW FINISHES TO BE APPLIED PRIOR TO REINSTALLATION.
18. ALL EXISTING MECHANICAL PENETRATIONS (INCLUDING MECH. AIR INTAKE LOUVERS) ABOVE THE ROOF TO BE SANDED, PRIMED AND PAINTED W/ HIGH HEAT PAINT. REMOVE DENTS AND IMPERFECTIONS PRIOR TO APPLICATION OF NEW FINISHES. COLOR TO MATCH NEW PRE-FINISHED METAL FLASHING.
19. WHERE NOTED, PROVIDE NEW MEMBRANE ROOFING ASSEMBLY OVER MODIFIED ROOF STRUCTURE AS DETAILED AND SPECIFIED.
20. WHERE NOTED, PROVIDE NEW ASPHALT SHINGLE ROOFING AND UNDERLAYMENTS OVER ROOF STRUCTURE AS DETAILED AND SPECIFIED. PROVIDE NEW ASPHALT SHINGLE STARTER STRIP THROUGHOUT EDGE OF ROOF. ASPHALT SHINGLES USED FOR STARTER STRIP SHALL BE THE SAME WEIGHT AND QUALITY AS THOSE USED FOR THE PRIMARY ROOF SHINGLE COVERING.
21. DURING REMOVAL OF EXISTING ASPHALT SHINGLE ROOF SYSTEM, IF EXISTING SECONDARY UNDERLAYMENT CANNOT BE REMOVED DUE TO DAMAGE BEING INCURRED UPON THE EXISTING ROOF SHEATHING BY THE REMOVAL, EXISTING SECONDARY UNDERLAYMENT CAN REMAIN. NEW SECONDARY UNDERLAYMENT IS STILL REQUIRED OVER THE EXISTING SECONDARY UNDERLAYMENT WHEN IT CANNOT BE SUCCESSFULLY PULLED UP. REFER TO NOTES / DETAILS FOR ADDITIONAL DEMOLITION AND NEW CONSTRUCTION REQUIREMENTS.
22. AT NEW ASPHALT SHINGLE ROOF AREA, NEW SECONDARY UNDERLAYMENT "ICE AND WATER SHIELD MEMBRANE" TO BE APPLIED (3) ROWS DEEP ALONG ALL PERIMETER EDGES (EAVES AND GABLES) TO PROVIDE MINIMUM 24" COVERAGE INSIDE OF EXTERIOR WALL FOR ICE DAM PROTECTION. IF EXISTING SECONDARY UNDERLAYMENT CANNOT BE SUCCESSFULLY REMOVED WITHOUT DAMAGING THE EXISTING ROOF SHEATHING, ENSURE NEW SECONDARY UNDERLAYMENT LAPS OVER AND CONCEALS THE EXISTING SECONDARY UNDERLAYMENT THAT REMAINS IN PLACE.
23. AT NEW ASPHALT SHINGLE ROOF AREA, PROVIDE NEW SECONDARY UNDERLAYMENT "ICE AND WATER SHIELD MEMBRANE" 12" MINIMUM UP VERTICAL FACE OF ALL ROOF TO WALL INTERFACES. WHERE 12" VERTICAL IS NOT POSSIBLE, PROVIDE MAXIMUM VERTICAL DIMENSION POSSIBLE TO AREA IN QUESTION.
24. PROVIDE ROOF TO WALL STEPPED FLASHING AND KICK-OUT FLASHING WHERE SLOPED ROOF INTERSECTS WITH A SIDE WALL. EXISTING BRICK WALL ASSEMBLY TO REMAIN AND BE PROTECTED. COORDINATE STEPPED FLASHING AND KICK FLASHING INSTALL W/ NEW MEMBRANES / SHINGLES TO ENSURE PROPER WATER SHED AWAY FROM BUILDING ENVELOPE.
25. AT ROOF TO WALL TRANSITIONS, NEW KICK-OUT FLASHING TO BE MINIMUM 6" X 6" X 12" WITH A 100 DEGREE TO 110 DEGREE BEND / KICK-OUT TO DIVERT WATER AWAY FROM THE WALL. COORDINATE WITH STEP FLASHING.
26. REFER TO DETAIL 11/A-5 AND SPECIFICATIONS FOR SEQUENCING / LAPPING REQUIREMENTS.
27. EXISTING ROOFS ARE LOW SLOPE. WHERE NEW ASPHALT SHINGLE ROOF ASSEMBLIES ARE TO BE USED, PROVIDE LOW SLOPE PROTECTION (DOUBLE LAYER OF PRIMARY) TYPICAL TO MANUFACTURER RE-ROOF REQUIREMENTS. SEE SPECIFICATIONS.
28. ALL EXPOSED ROOF FASTENERS ARE TO BE COVERED WITH MASTIC MATCHING COLOR OF NEW ADJACENT ITEM (ITEMS SUCH AS BUT NOT LIMITED TO PIPE BOOTS, ROOF CAPS AND ROOF ATTIC VENTS). SEE GEN. NOTE 32 REGARDING SPRAY BALMED SCREW ANCHORS.
29. MAINTAIN ALL APPLICABLE CODE MANDATED CLEARANCES FROM INTAKE VENTS TO TYPE B VENTS AND PLUMBING VENTS.
30. ALL PRE-FINISHED METAL FLASHING JOINTS ARE TO FOLLOW REQUIREMENTS OF THE ROOFING CONTRACTORS ASSOCIATION OF BRITISH COLUMBIA (RCABC) ROOFING PRACTICES MANUAL AND UTILIZE APPROVED METHODS SUCH AS BUT NOT LIMITED TO STANDING SEAMS AND S-LOCKS.
31. VERIFY ALL MECHANICAL DUCTED ROOF PENETRATION LOCATIONS ON SITE TO ENSURE THEY ARE MECHANICAL DUCTED ROOF PENETRATIONS AND NOT ATTIC VENTILATION PENETRATIONS. REPORT ANY DISCREPANCIES TO CONSULTANT PRIOR TO CARRYING OUT WORK REGARDING MECHANICAL DUCTED ROOF PENETRATION LOCATIONS.
32. MASONRY SCREW ANCHORS TO BE ITW TAPCON 1/4" DIA. HEX HEAD (OR APPROVED EQUAL) C/W GASKETED WASHER. SPRAY BALM EXPOSED HEAD TO MATCH COLOR OF OBJECT BEING ANCHORED.
33. AT ALL MECHANICALLY DUCTED ROOF TOP CAPS REMOVED DUE TO EXCESSIVE DAMAGE AN/OR REQUIRING NEW PAINT FINISH, ENSURE PROPER CONNECTION IS MADE BACK TO EXISTING DUCTWORK.

ROOF #1 VENTILATION CALCULATIONS:

ROOF #1 CEILING AREA = +/- 173,889 SQ.IN.

1/300 X CEILING AREA = +/- 579.63 SQ.IN. MIN. VENTILATION REQUIRED

25% VENTING AT TOP = 144.91 SQ.IN. MIN. 25% VENTING AT BOTTOM = 144.91 SQ.IN. MIN.

TOP OF SPACE IS VENTED BY (1) EXIST. ROOF VENT LOCATION W/ NEW SQUARE TOP ROOF EXHAUST LOUVER STATIC VENT. TOTAL AREA CALCULATED AT 1 X 70 SQ.IN = 70 SQ.IN.

TOP OF SPACE IS VENTED BY (4) NEW ROOF VENT LOCATIONS W/ NEW SQUARE TOP ROOF EXHAUST LOUVER STATIC VENT. TOTAL AREA CALCULATED AT 4 X 70 SQ.IN = 280 SQ.IN.

TOP OF SPACE (NEW SOFFIT) IS VENTED BY PERFORATION MEETING MIN. 3.375 SQ.IN. OF NET FREE AREA / SQ. FOOT. TOTAL AREA OF SOFFIT AT TOP IS +/- 38 SQ.FT. = +/- 128 SQ.IN.

BOTTOM OF SPACE (NEW SOFFIT) IS VENTED BY PERFORATION MEETING MIN. 3.375 SQ.IN. OF NET FREE AREA / SQ. FOOT. TOTAL AREA OF SOFFIT AT BOTTOM OF SPACE IS +/- 133 SQ.FT. = +/- 449 SQ.IN.

TOTAL VENTILATION IS +/- 927 SQ.IN. AND EXCEEDS REQUIREMENT.

ROOF #2 VENTILATION CALCULATIONS:

ROOF #2 CEILING AREA = +/- 424,796 SQ.IN.

1/300 X CEILING AREA = +/- 1,416 SQ.IN. MIN. VENTILATION REQUIRED

25% VENTING AT TOP = 354 SQ.IN. MIN.. 25% VENTING AT BOTTOM = 354 SQ.IN. MIN.

TOP OF SPACE IS VENTED BY (6) EXIST. ROOF VENT LOCATIONS W/ NEW SQUARE TOP ROOF EXHAUST LOUVER STATIC VENT. TOTAL AREA CALCULATED AT 6 X 70 SQ.IN = 420 SQ.IN.

TOP OF SPACE IS VENTED BY (2) NEW SQUARE TOP ROOF EXHAUST LOUVER STATIC VENTS. TOTAL AREA CALCULATED AT 2 X 70 SQ.IN = 140 SQ.IN.

TOP OF SPACE (NEW SOFFIT) IS VENTED BY PERFORATION MEETING MIN. 3.375 SQ.IN. OF NET FREE AREA / SQ. FOOT. TOTAL AREA OF SOFFIT AT TOP IS +/- 55 SQ.FT. = +/- 186 SQ.IN.

BOTTOM OF SPACE IS VENTED BY (6) NEW RECTANGULAR INTAKE VENTS (24 LINEAL FEET). TOTAL AREA CALCULATED AT 6 X 36 SQ.IN = 216 SQ.IN.

BOTTOM OF SPACE (NEW SOFFIT) IS VENTED BY PERFORATION MEETING MIN. 3.375 SQ.IN. OF NET FREE AREA / SQ. FOOT. TOTAL AREA OF SOFFIT AT BOTTOM OF SPACE IS +/- 153 SQ.FT. = +/- 516 SQ.IN.

TOTAL VENTILATION IS +/- 1,478 SQ.IN. AND EXCEEDS REQUIREMENT.

ROOF #3 VENTILATION CALCULATIONS:

ROOF #3 CEILING AREA = +/- 215,859 SQ.IN.

1/300 X CEILING AREA = +/- 719.53 SQ.IN. MIN. VENTILATION REQUIRED

25% VENTING AT TOP = 179.88 SQ.IN. MIN.. 25% VENTING AT BOTTOM = 179.88 SQ.IN. MIN.

TOP OF SPACE IS VENTED BY (6) NEW ROOF VENT LOCATIONS W/ NEW SQUARE TOP ROOF EXHAUST LOUVER STATIC VENT. TOTAL AREA CALCULATED AT 6 X 70 SQ.IN = 420 SQ.IN.

TOP OF SPACE (NEW SOFFIT) IS VENTED BY PERFORATION MEETING MIN. 3.375 SQ.IN. OF NET FREE AREA / SQ. FOOT. TOTAL AREA OF SOFFIT AT TOP IS +/- 47 SQ.FT. = +/- 159 SQ.IN.

BOTTOM OF SPACE (NEW SOFFIT) IS VENTED BY PERFORATION MEETING MIN. 3.375 SQ.IN. OF NET FREE AREA / SQ. FOOT. TOTAL AREA OF SOFFIT AT BOTTOM OF SPACE IS +/- 173 SQ.FT. = +/- 584 SQ.IN.

TOTAL VENTILATION IS +/- 1,163 SQ.IN. AND EXCEEDS REQUIREMENT.

ROOF #4 VENTILATION CALCULATIONS:

ROOF #4 CEILING AREA = +/- 315,413 SQ.IN.

1/300 X CEILING AREA = +/- 1,051.38 SQ.IN. MIN. VENTILATION REQUIRED

25% VENTING AT TOP = 262.84 SQ.IN. MIN. 25% VENTING AT BOTTOM = 262.84 SQ.IN. MIN.

TOP OF SPACE IS VENTED BY NEW CONTINUOUS ROOF RIDGE EXHAUST VENT (BAFFLED). PROVIDE NEW 2"X22" AIR SLOTS ALTERNATING BOTH SIDES OF RIDGE. TOTAL AREA CALCULATED AT 10 AIR SLOTS X 44 SQ.IN = 440 SQ.IN.

TOP OF SPACE (NEW SOFFIT) IS VENTED BY PERFORATION MEETING MIN. 3.375 SQ.IN. OF NET FREE AREA / SQ. FOOT. TOTAL AREA OF SOFFIT AT TOP IS +/- 35 SQ.FT. = +/- 118 SQ.IN.

BOTTOM OF SPACE (NEW SOFFIT) IS VENTED BY PERFORATION MEETING MIN. 3.375 SQ.IN. OF NET FREE AREA / SQ. FOOT. TOTAL AREA OF SOFFIT AT BOTTOM OF SPACE IS +/- 156 SQ.FT. = +/- 526 SQ.IN.

TOTAL VENTILATION IS +/- 1,084 SQ.IN. AND EXCEEDS REQUIREMENT.

ROOF #5 VENTILATION CALCULATIONS:

ROOF #5 CEILING AREA = +/- 216,204 SQ.IN.

1/300 X CEILING AREA = +/- 720.68 SQ.IN. MIN. VENTILATION REQUIRED

25% VENTING AT TOP = 180.17 SQ.IN. MIN.. 25% VENTING AT BOTTOM = 180.17 SQ.IN. MIN.

TOP OF SPACE IS VENTED BY (6) NEW SQUARE TOP ROOF EXHAUST LOUVER STATIC VENTS. TOTAL AREA CALCULATED AT 6 X 70 SQ.IN = 420 SQ.IN.

TOP OF SPACE (NEW SOFFIT) IS VENTED BY PERFORATION MEETING MIN. 3.375 SQ.IN. OF NET FREE AREA / SQ. FOOT. TOTAL AREA OF SOFFIT AT TOP IS +/- 47 SQ.FT. = +/- 159 SQ.IN.

BOTTOM OF SPACE (NEW SOFFIT) IS VENTED BY PERFORATION MEETING MIN. 3.375 SQ.IN. OF NET FREE AREA / SQ. FOOT. TOTAL AREA OF SOFFIT AT BOTTOM OF SPACE IS +/- 173 SQ.FT. = +/- 583 SQ.IN.

TOTAL VENTILATION IS +/- 1,162 SQ.IN. AND EXCEEDS REQUIREMENT.

ROOF #6 VENTILATION CALCULATIONS:

ROOF #6 CEILING AREA = +/- 398,243 SQ.IN.

1/300 X CEILING AREA = +/- 1,327.48 SQ.IN. MIN. VENTILATION REQUIRED

25% VENTING AT TOP = 331.87 SQ.IN. MIN.. 25% VENTING AT BOTTOM = 331.87 SQ.IN. MIN.

TOP OF SPACE IS VENTED BY (4) EXIST. ROOF VENT LOCATIONS W/ NEW SQUARE TOP ROOF EXHAUST LOUVER STATIC VENT. TOTAL AREA CALCULATED AT 4 X 70 SQ.IN = 280 SQ.IN.

TOP OF SPACE IS VENTED BY (7) NEW ROOF VENT LOCATION W/ NEW SQUARE TOP ROOF EXHAUST LOUVER STATIC VENT. TOTAL AREA CALCULATED AT 7 X 70 SQ.IN = 490 SQ.IN.

BOTTOM OF SPACE (NEW SOFFIT) IS VENTED BY PERFORATION MEETING MIN. 3.375 SQ.IN. OF NET FREE AREA / SQ. FOOT. TOTAL AREA OF SOFFIT AT BOTTOM OF SPACE IS +/- 181 SQ.FT. = +/- 611 SQ.IN.

TOTAL VENTILATION IS +/- 1,381 SQ.IN. AND EXCEEDS REQUIREMENT.

ROOF #7 VENTILATION CALCULATIONS:

ROOF #7 CEILING AREA = +/- 208,951 SQ.IN.

1/300 X CEILING AREA = +/- 696.50 SQ.IN. MIN. VENTILATION REQUIRED

25% VENTING AT TOP = 174.13 SQ.IN. MIN. 25% VENTING AT BOTTOM = 174.13 SQ.IN. MIN.

TOP OF SPACE IS VENTED BY (1) EXIST. ROOF VENT LOCATION W/ NEW SQUARE TOP ROOF EXHAUST LOUVER STATIC VENT. TOTAL AREA CALCULATED AT 1 X 70 SQ.IN = 70 SQ.IN.

TOP OF SPACE IS VENTED BY (5) NEW ROOF VENT LOCATIONS W/ NEW SQUARE TOP ROOF EXHAUST LOUVER STATIC VENT. TOTAL AREA CALCULATED AT 5 X 70 SQ.IN = 350 SQ.IN.

TOP OF SPACE (NEW SOFFIT) IS VENTED BY PERFORATION MEETING MIN. 3.375 SQ.IN. OF NET FREE AREA / SQ. FOOT. TOTAL AREA OF SOFFIT AT TOP IS +/- 38 SQ.FT. = +/- 128 SQ.IN.

BOTTOM OF SPACE (NEW SOFFIT) IS VENTED BY PERFORATION MEETING MIN. 3.375 SQ.IN. OF NET FREE AREA / SQ. FOOT. TOTAL AREA OF SOFFIT AT BOTTOM OF SPACE IS +/- 161 SQ.FT. = +/- 543 SQ.IN.

TOTAL VENTILATION IS +/- 1,091 SQ.IN. AND EXCEEDS REQUIREMENT.

ROOF #8 VENTILATION CALCULATIONS:

ROOF #8 CEILING AREA = +/- 306,209 SQ.IN.

1/300 X CEILING AREA = +/- 1,020.70 SQ.IN. MIN. VENTILATION REQUIRED

25% VENTING AT TOP = 255.18 SQ.IN. MIN.. 25% VENTING AT BOTTOM = 255.18 SQ.IN. MIN.

TOP OF SPACE IS VENTED BY NEW CONTINUOUS ROOF RIDGE EXHAUST VENT (BAFFLED). PROVIDE NEW 2"X22" AIR SLOTS ALTERNATING BOTH SIDES OF RIDGE. TOTAL AREA CALCULATED AT 12 AIR SLOTS X 44 SQ.IN = 528 SQ.IN.

BOTTOM OF SPACE IS VENTED BY (2) NEW INTAKE ROOF VENTILATORS. TOTAL AREA CALCULATED AT 2 X 144 SQ.IN = 288 SQ.IN.

BOTTOM OF SPACE (NEW SOFFIT) IS VENTED BY PERFORATION MEETING MIN. 3.375 SQ.IN. OF NET FREE AREA / SQ. FOOT. TOTAL AREA OF SOFFIT AT BOTTOM OF SPACE IS +/-64.3 SQ.FT. = +/- 217 SQ.IN.

TOTAL VENTILATION IS +/- 1,033 SQ.IN. AND EXCEEDS REQUIREMENT.

ROOF #9 & #10 VENTILATION CALCULATIONS:

ROOF #9 AND #10 CEILING AREA = +/- 292,465 SQ.IN.

1/300 X CEILING AREA = +/- 974.88 SQ.IN. MIN. VENTILATION REQUIRED

25% VENTING AT TOP = 243.72 SQ.IN. MIN.. 25% VENTING AT BOTTOM = 243.72 SQ.IN. MIN.

TOP OF SPACE IS VENTED BY NEW CONTINUOUS ROOF RIDGE EXHAUST VENT (BAFFLED). PROVIDE NEW 2"X22" AIR SLOTS ALTERNATING BOTH SIDES OF RIDGE. TOTAL AREA CALCULATED AT 8 AIR SLOTS X 44 SQ.IN = 352 SQ.IN.

TOP OF SPACE (NEW SOFFIT) IS VENTED BY PERFORATION MEETING MIN. 3.375 SQ.IN. OF NET FREE AREA / SQ. FOOT. TOTAL AREA OF SOFFIT AT TOP IS +/- 72 SQ.FT. = +/- 243 SQ.IN.

BOTTOM OF SPACE IS VENTED BY (2) NEW INTAKE ROOF VENTILATORS. TOTAL AREA CALCULATED AT 2 X 144 SQ.IN = 288 SQ.IN.

BOTTOM OF SPACE (NEW SOFFIT) IS VENTED BY PERFORATION MEETING MIN. 3.375 SQ.IN. OF NET FREE AREA / SQ. FOOT. TOTAL AREA OF SOFFIT AT BOTTOM OF SPACE IS +/-105 SQ.FT. = +/- 355 SQ.IN.

TOTAL VENTILATION IS +/- 1,238 SQ.IN. AND EXCEEDS REQUIREMENT.

ROOF #11 VENTILATION CALCULATIONS:

ROOF #11 CEILING AREA = +/- 680,812 SQ.IN.

1/300 X CEILING AREA = +/- 2,269.37 SQ.IN. MIN. VENTILATION REQUIRED

25% VENTING AT TOP = 567.34 SQ.IN. MIN. 25% VENTING AT BOTTOM = 567.34 SQ.IN.MIN.

TOP OF SPACE IS VENTED BY NEW CONTINUOUS ROOF RIDGE EXHAUST VENT (BAFFLED). PROVIDE NEW 2"X22" AIR SLOTS ALTERNATING BOTH SIDES OF RIDGE. TOTAL AREA CALCULATED AT 24 AIR SLOTS X 44 SQ.IN = 1,056 SQ.IN.

TOP OF SPACE (NEW SOFFIT) IS VENTED BY PERFORATION MEETING MIN. 3.375 SQ.IN. OF NET FREE AREA / SQ. FOOT. TOTAL AREA OF SOFFIT AT TOP IS +/- 34 SQ.FT. = +/- 115 SQ.IN.

BOTTOM OF SPACE (NEW SOFFIT) IS VENTED BY PERFORATION MEETING MIN. 3.375 SQ.IN. OF NET FREE AREA / SQ. FOOT. TOTAL AREA OF SOFFIT AT BOTTOM OF SPACE IS +/- 366 SQ.FT. = +/- 1,235 SQ.IN.

TOTAL VENTILATION IS +/- 2,406 SQ.IN. AND EXCEEDS REQUIREMENT.

ROOF #12 VENTILATION CALCULATIONS:

ROOF #12 CEILING AREA = +/- 40,320 SQ.IN.

1/300 X CEILING AREA = +/- 134 SQ.IN. MIN. VENTILATION REQUIRED

25% VENTING AT TOP = 33.50 SQ.IN. MIN. 25% VENTING AT BOTTOM = 33.50 SQ.IN.MIN.

TOP OF SPACE IS VENTED BY (2) NEW SQUARE TOP ROOF EXHAUST LOUVER STATIC VENTS. TOTAL AREA CALCULATED AT 2 X 50 SQ.IN = 100 SQ.IN.

TOP OF SPACE (NEW SOFFIT) IS VENTED BY PERFORATION MEETING MIN. 3.375 SQ.IN. OF NET FREE AREA / SQ. FOOT. TOTAL AREA OF SOFFIT AT TOP IS +/- 14 SQ.FT. = +/- 47 SQ.IN.

BOTTOM OF SPACE (NEW SOFFIT) IS VENTED BY PERFORATION MEETING MIN. 3.375 SQ.IN. OF NET FREE AREA / SQ. FOOT. TOTAL AREA OF SOFFIT AT BOTTOM OF SPACE IS +/- 58 SQ.FT. = +/- 196 SQ.IN.

TOTAL VENTILATION IS +/- 343 SQ.IN. AND EXCEEDS REQUIREMENT.

LEGEND:

- EXISTING ROOF LINE
- EXISTING WALL LINE BELOW
- EXISTING ASPHALT SHINGLE ASSEMBLY TO BE REMOVED
- EXISTING EPDM MEMBRANE ASSEMBLY TO BE REMOVED
- EXISTING MODIFIED MEMBRANE ASSEMBLY TO BE REMOVED
- NEW ASPHALT SHINGLES: CERTAINTEED NORTHGATE CLIMATEFLEX - MAX DEF HEATHER BLEND. SEE SPECIFICATIONS
- NEW MEMBRANE ROOF: EPDM MEMBRANE - BLACK SEE BELOW, DETAILS AND SPECIFICATIONS

EPDM ROOF MEMBRANE
FULLY ADHERED SYSTEM
5/8" ROOF BOARD
1 1/2" INSULATION (VERIFY / COORDINATE THICKNESS ON SITE)
ROOF CRICKET STRUCTURE (NEW / MODIFIED)
EXIST. 5/8" PLYWOOD TO REMAIN
EXIST. ROOF STRUCTURE TO REMAIN

NOTE: PROVIDE ALL PRIMERS, SEALANTS, MEMBRANE FLASHINGS, AND MISCELLANEOUS ITEMS AS PER MANUFACTURER'S STANDARD DETAILS - SEE SPECIFICATIONS.

COLORS:

DRIP FLASHING: CASCADIA METALS
- WEATHERED COPPER (KYNAR 500)

RAKE FLASHING: CASCADIA METALS
- WEATHERED COPPER (KYNAR 500)

FASCIA: CASCADIA METALS
- WEATHERED COPPER (KYNAR 500)

SOFFIT AND TRIMS: KAYCAN
- WOLF WHITE

EAVESTROUGH AND DOWNSPOUTS: CASCADIA METALS
- WEATHERED COPPER (KYNAR 500)

ROOF FLASHING: CASCADIA METALS
- WEATHERED COPPER (KYNAR 500)

VALLEY FLASHING: CASCADIA METALS
- WEATHERED COPPER (KYNAR 500)

METAL RIDGE VENT:
- MEDIUM BRONZE (KYNAR 500)

FACTION ARCHITECTURE INC
1919 10th AVENUE SW,
CALGARY, AB
T3C 0K3
403-523-7943

DRAWINGS ARE NOT TO BE SCALED. Confirm all dimensions on site. Any apparent discrepancies in the Drawings shall be brought to the Architect's attention with time being of the essence

NOTES:

FACTION ARCHITECTURE INC. PROJ. NO.: 21104

SEAL:

SEAL:

ISSUED FOR:

NO.	DATE	DESCRIPTION

CONSULTANTS:

PROJECT FOR:

THE CHURCH OF JESUS CHRIST OF LATTER-DAY SAINTS

PROJECT NAME:

VICTORIA 2, 3 ROOF
VICTORIA BRITISH COLUMBIA STAKE

ROOF RESTORATION

PROJECT ADDRESS:

701 MANN AVENUE
VICTORIA, BC, V8Z 6E7

DRAWING DESCRIPTION:

VENTILATION PLAN, LEGEND AND GENERAL NOTES

PROJECT DESIGNATION: 515-5169-2101-0101

WORK ORDER NO.: -

PROPERTY NO.: 515-5169

PROJECT TYPE.:

PLOT SCALE: AS NOTED

DATE ISSUED: JUNE 2021

REVIEWED: EZ/NH

BY: EZ

DRAWING NO.: A-1

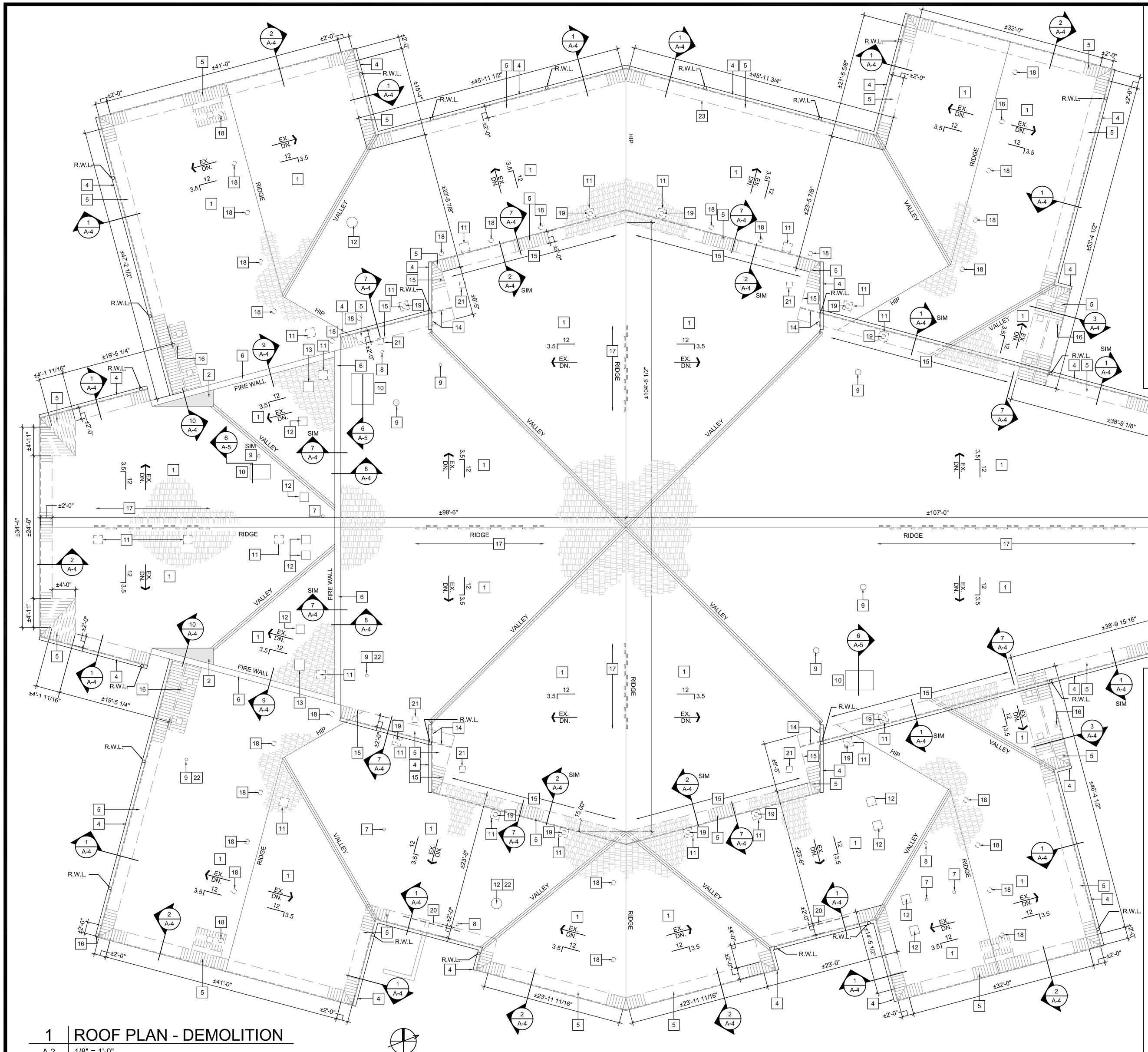

1 | ROOF PLAN - DEMOLITION
A-2 | 1/8" = 1'-0"

DEMOLITION KEY NOTES:

1. REMOVE EXISTING ASPHALT SHINGLE ROOFING SYSTEM, ALL ROOF RELATED FLASHING (INCLUDING VALLEY METAL) , AND UNDERLAYMENTS OVER ENTIRE EXISTING ROOF TO EXPOSE EXISTING SHEATHING. PREPARE FOR NEW CONSTRUCTION. SEE GENERAL NOTES #21 AND #22.
2. REMOVE EXISTING EPDM ROOFING SYSTEM, ALL ROOF RELATED FLASHING, AND UNDER-LAYMENTS OVER PORTION OF EXISTING ROOF AS NOTED TO EXPOSE EXIST, SHEATHING. REMOVE EXISTING LOCALIZED CRICKET OVERBUILD. PREPARE FOR NEW CONSTRUCTION.
3. REMOVE EXISTING MODIFIED MEMBRANE ROOFING SYSTEM, ALL ROOF RELATED FLASHING, AND UNDERLAYMENTS OVER ENTIRE EXISTING ROOF TO EXPOSE EXISTING SHEATHING. PREPARE FOR NEW CONSTRUCTION.
4. REMOVE ALL EXISTING PRE-FINISHED EAVESTROUGH AND RAIN WATER LEADERS. PREPARE FOR NEW CONSTRUCTION.
5. REMOVE ALL EXISTING PRE-FINISHED FASCIA AND PRE-FINISHED VENTED SOFFIT INCLUDING TRIMS. PREPARE FOR NEW CONSTRUCTION. COORDINATE REMOVAL W/ EXIST. SOFFIT RECESSED LUMINAIRES (AT BUILDING ENTRY POINTS) WHICH ARE TO REMAIN.
6. REMOVE ALL EXISTING PRE-FINISHED FIRE WALL CAP FLASHING ASSEMBLY. PREPARE FOR NEW CONSTRUCTION.
7. EXISTING PLUMBING VENT LOCATION TO REMAIN. CUT EXIST. PLUMBING VENT PIPE BELOW ROOF LINE TO PREPARE FOR NEW PIPE EXTENSION THROUGH ROOF LINE. SEE DET. 3/A-5.
8. EXISTING PLUMBING VENT LOCATION TO BE REMOVED AND RELOCATED. PREPARE FOR NEW CONSTRUCTION. SEE DETAIL 3/A-5.
9. EXISTING MECHANICAL FLUE LOCATION (TYPE B VENT) TO REMAIN. REMOVE EXISTING BASE FLASHING AND PREPARE FOR NEW CONSTRUCTION. SEE DETAIL 2/A-5.
10. EXISTING METAL AIR INTAKE / PENTHOUSE TO BE REMOVED TO PREPARE FOR NEW CONSTRUCTION. SAVE EXISTING AIR INTAKE / PENTHOUSE ASSEMBLY FOR REUSE IN NEW CONSTRUCTION AS NOTED. SEE DETAIL 6/A-5.
11. EXISTING ATTIC VENT ROOF LOUVER LOCATION TO BE REMOVED. PREPARE FOR NEW CONSTRUCTION. INFILL LOCATIONS NOT BEING REUSED W/ SHEATHING TO MATCH EXIST.
12. EXISTING ROOF CAP LOCATION TO BE REMOVED. SAVE EXISTING ROOF CAP ASSEMBLY FOR REUSE IN NEW CONSTRUCTION AS NOTED. SEE GENERAL NOTE 31.
13. EXISTING EXHAUST FAN ON PRE-FABRICATED METAL CURB TO BE REMOVED TO PREPARE FOR NEW CONSTRUCTION. SAVE EXISTING EXHAUST FAN ASSEMBLY, CURB CONSTRUCTION AND EXISTING DUCT FOR REUSE IN NEW CONSTRUCTION AS NOTED.
14. REMOVE EXISTING SHEET METAL FINISH FROM EXISTING 1/2" PLYWOOD / 2X4 FRAMED BOX OUT UNDER EXISTING EAVE. PREPARE FOR NEW CONSTRUCTION AS NOTED.

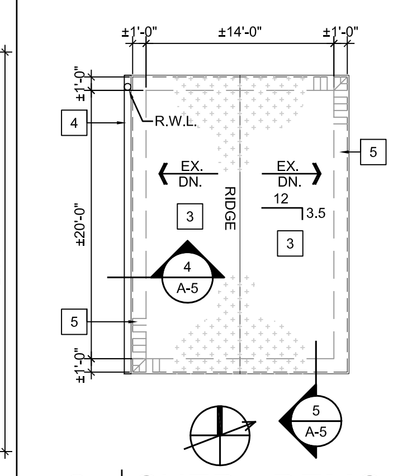

2 | SHED - DEMO
A-2 | 1/8" = 1'-0"

15. AT EXISTING ROOF / BRICK WALL INTERFACE, REMOVE EXISTING METAL FLASHING IN REGLET, CAULKING / SEALANT AND EXISTING METAL COUNTER FLASHING. PREPARE FOR NEW CONSTRUCTION AS NOTED. SEE DETAIL 7/A-4.
16. EXISTING FASCIA AND/OR SOFFIT MOUNTED SENSORS TO BE REMOVED TO ALLOW NEW CONSTRUCTION. PROTECT AND SAVE FOR REINSTALLATION AT EXISTING PREVIOUS LOCATION.
17. SAWCUT VENT STRIP OPENINGS INTO EXISTING PLYWOOD ROOF SHEATHING TO SUIT NEW ATTIC RIDGE VENT. SEE NEW ROOF PLAN AND DETAILS.
18. SAWCUT VENT OPENING INTO EXISTING PLYWOOD ROOF SHEATHING TO SUIT NEW ATTIC VENT. SEE NEW ROOF PLAN AND DETAILS. REFER TO MANUFACTURER REQUIREMENTS.
19. SAWCUT VENT OPENING INTO EXISTING PLYWOOD ROOF SHEATHING TO SUIT NEW ATTIC VENT. MODIFY AND/OR CLOSE OFF EXISTING OPENING TO ALLOW NEW OPENING TO BE COORDINATED WITH NEW ATTIC VENT . SEE NEW ROOF PLAN AND DETAILS. REFER TO MANUFACTURER REQUIREMENTS.
20. SAWCUT VENT OPENING INTO EXISTING PLYWOOD ROOF SHEATHING TO SUIT NEW ATTIC (INTAKE) VENT. SEE NEW ROOF PLAN. REFER TO MANUFACTURER REQUIREMENTS.
21. SAWCUT VENT OPENING INTO EXISTING PLYWOOD ROOF SHEATHING TO SUIT NEW ATTIC (INTAKE) VENTILATOR. SEE NEW ROOF PLAN AND DETAIL. REFER TO MANUFACTURER REQUIREMENTS.
22. REMOVE EXISTING VENT CAP DUE TO DAMAGE. PREPARE FOR REPLACEMENT CAP MATCHING EXISTING DIMENSIONS AND MATERIAL.
23. REMOVE RWL / CONDUIT / REFRIGERATION SHROUD. PREPARE FOR REPLACEMENT SHROUD. SEE NEW ROOF PLAN.

FACTION ARCHITECTURE

1919 10th AVENUE SW,
CALGARY, AB
T3C OK3
403-523-7943

DRAWINGS ARE NOT TO BE SCALED. Confirm all dimensions on site. Any apparent discrepancies in the Drawings shall be brought to the Architect's attention with time being of the essence

NOTES:

FACTION ARCHITECTURE INC. PROJ. NO.: 21104

SEAL:

SEAL:

ISSUED FOR:

NO.	DATE	DESCRIPTION

CONSULTANTS:

PROJECT FOR:

THE CHURCH OF JESUS CHRIST OF LATTER-DAY SAINTS

PROJECT NAME:

VICTORIA 2, 3 ROOF
VICTORIA BRITISH COLUMBIA STAKE

ROOF RESTORATION

PROJECT ADDRESS:

701 MANN AVENUE
VICTORIA, BC, V8Z 6E7

DRAWING DESCRIPTION:

ROOF PLAN - DEMOLITION

PROJECT DESIGNATION: 515-5169-2101-0101

WORK ORDER NO.: -

PROPERTY NO.: 515-5169

PROJECT TYPE.:

PLOT SCALE: 1/8"=1'-0"

DATE ISSUED: JUNE 2021

REVIEWED: EZ/NH

BY: EZ

DRAWING NO.: A-2

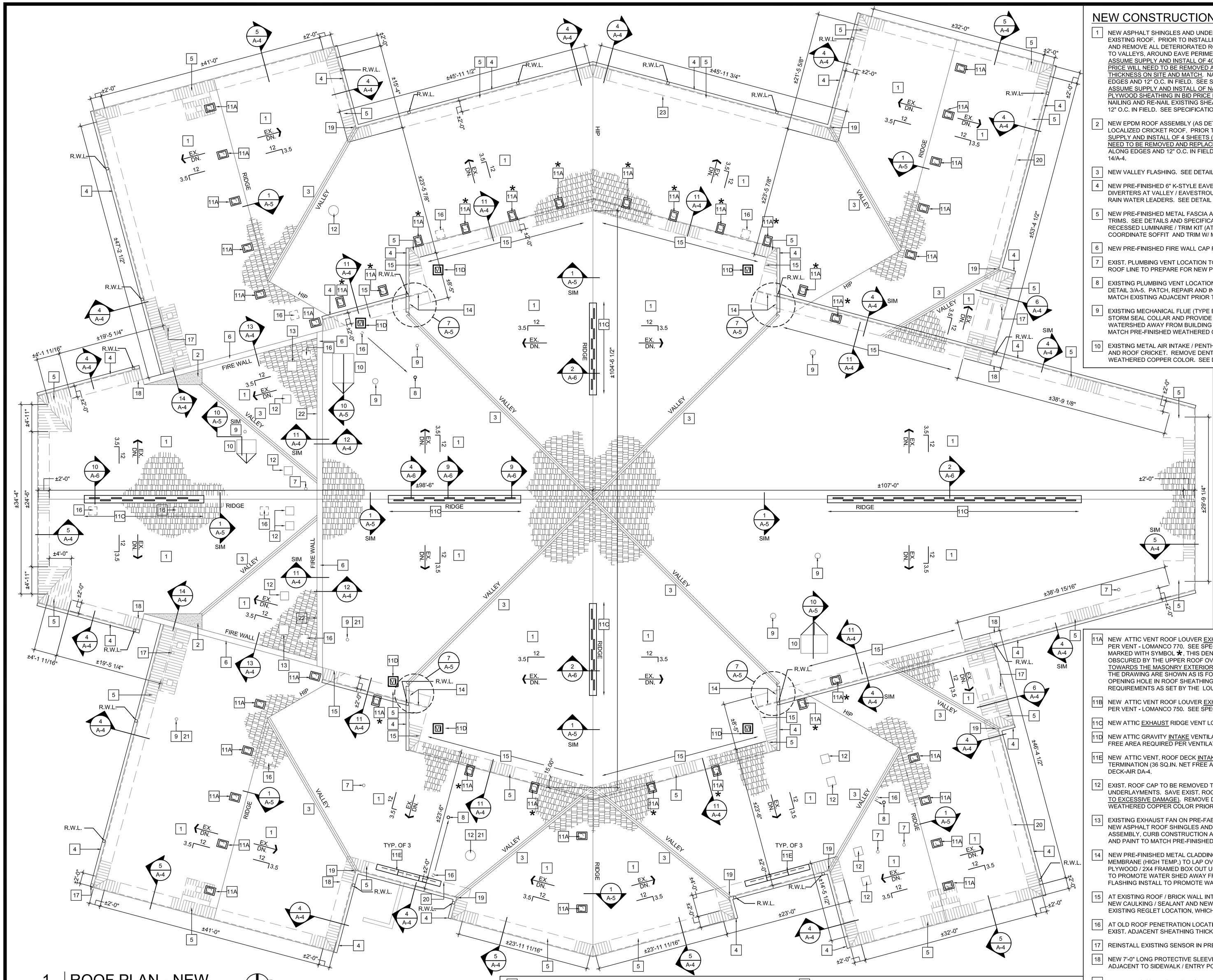

1 ROOF PLAN - NEW

A-3 | 1/8" = 1'-0"

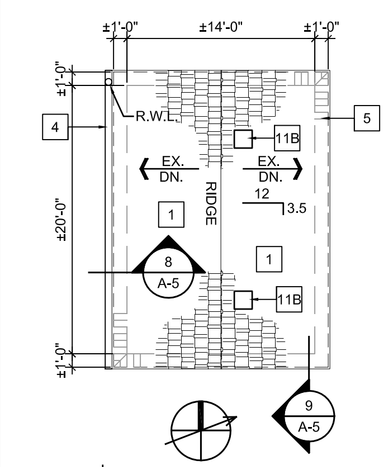

2 SHED - NEW

A-3 | 1/8" = 1'-0"

NEW CONSTRUCTION KEY NOTES:

1. NEW ASPHALT SHINGLES AND UNDERLAYMENTS (AS DETAILED AND SPECIFIED) OVER EXISTING ROOF. PRIOR TO INSTALLING NEW UNDERLAYMENTS, INSPECT EXISTING ROOF AND REMOVE ALL DETERIORATED ROOF SHEATHING IN AREAS SUCH AS BUT NOT LIMITED TO VALLEYS, AROUND EAVE PERIMETER, AND AT VERTICAL WALL INTERSECTIONS - ASSUME SUPPLY AND INSTALL OF 40 SHEETS (4' X 8') OF 5/8" PLYWOOD SHEATHING IN BID PRICE WILL NEED TO BE REMOVED AND REPLACED. VERIFY ACTUAL SHEATHING THICKNESS ON SITE AND MATCH. NAIL NEW SHEATHING W/ 3" NAILS AT 4" O.C. ALONG EDGES AND 12" O.C. IN FIELD. SEE SPECIFICATIONS FOR ROOF SYSTEM. ASSUME SUPPLY AND INSTALL OF NAILS FOR RE-NAILING 40 SHEETS (4' X 8') OF EXISTING PLYWOOD SHEATHING IN BID PRICE DUE TO LOOSE NAILING. HAMMER IN EXISTING LOOSE NAILING AND RE-NAIL EXISTING SHEATHING W/ NEW 3" NAILS AT 4" O.C. ALONG EDGES AND 12" O.C. IN FIELD. SEE SPECIFICATIONS FOR ROOF SYSTEM.
2. NEW EPDM ROOF ASSEMBLY (AS DETAILED AND SPECIFIED) OVER NEW / MODIFIED LOCALIZED CRICKET ROOF. PRIOR TO INSTALLING NEW EPDM ASSEMBLY, ASSUME SUPPLY AND INSTALL OF 4 SHEETS (4' X 8') OF 5/8" PLYWOOD SHEATHING IN BID PRICE WILL NEED TO BE REMOVED AND REPLACED. NAIL NEW SHEATHING W/ 3" NAILS AT 4" O.C. ALONG EDGES AND 12" O.C. IN FIELD. SEE SPECIFICATION FOR ROOF SYSTEM. SEE DETAIL 14/A-4.
3. NEW VALLEY FLASHING. SEE DETAIL 11/A-5. SEE SPECIFICATION.
4. NEW PRE-FINISHED 6" K-STYLE EAVESTROUGH C/W NEW PRE-FINISHED METAL SPLASH DIVERTERS AT VALLEY / EAVESTROUGH INTERSECTIONS AND 3"X4" PRE-FINISHED METAL RAIN WATER LEADERS. SEE DETAIL 15/A-6. SEE SPECIFICATION.
5. NEW PRE-FINISHED METAL FASCIA AND PRE-FINISHED METAL VENTED SOFFIT INCLUDING TRIMS. SEE DETAILS AND SPECIFICATION. COORDINATE NEW SOFFIT W/ EXISTING SOFFIT RECESSED LUMINAIRE / TRIM KIT (AT BUILDING ENTRY POINTS) WHICH ARE TO REMAIN. COORDINATE SOFFIT AND TRIM W/ MASONRY WALL PROFILE WHICH VARIES.
6. NEW PRE-FINISHED FIRE WALL CAP FLASHING ASSEMBLY. SEE DETAILS AND SPEC..
7. EXIST. PLUMBING VENT LOCATION TO REMAIN. CUT EXISTING PLUMBING VENT PIPE BELOW ROOF LINE TO PREPARE FOR NEW PIPE EXTENSION THROUGH ROOF LINE. SEE DET. 3/A-5.
8. EXISTING PLUMBING VENT LOCATION REMOVED / RELOCATED TO NEW LOCATION. SEE DETAIL 3/A-5. PATCH, REPAIR AND INFILL OLD PENETRATION LOCATION W/ SHEATHING TO MATCH EXISTING ADJACENT PRIOR TO APPLICATION OF NEW ROOFING ASSEMBLY.
9. EXISTING MECHANICAL FLUE (TYPE B VENT) TO REMAIN. PROVIDE NEW JACK FLASHING W/ STORM SEAL COLLAR AND PROVIDE NEW UNDERLAYMENT (SHIPLAP STYLE) TO PROMOTE WATERSHED AWAY FROM BUILDING ENVELOPE. REMOVE DENTS, SAND AND PAINT TO MATCH PRE-FINISHED WEATHERED COPPER COLOR. SEE DETAIL 2/A-5.
10. EXISTING METAL AIR INTAKE / PENTHOUSE MODIFIED TO ALLOW HIGHER CURB STRUCTURE AND ROOF CRICKET. REMOVE DENTS, SAND AND PAINT TO MATCH PRE-FINISHED WEATHERED COPPER COLOR. SEE DETAIL 10/A-5.

11A NEW ATTIC VENT ROOF LOUVER EXHAUST LOCATION (70 SQ.IN. NET FREE AREA REQUIRED PER VENT - LOMANCO 770. SEE SPECIFICATION REGARDING COLOR). AT LOCATIONS MARKED WITH SYMBOL ✱, THIS DENOTES A LOWER ROOF LEVEL LOUVER LOCATION THAT IS OBSCURED BY THE UPPER ROOF OVERHANG. THESE LOCATIONS ARE TO BE SHIFTED TOWARDS THE MASONRY EXTERIOR WALL (TOP OF ROOF ATTIC VOLUME). LOCATIONS ON THE DRAWING ARE SHOWN AS IS FOR CLARITY. AT ALL ROOF LOUVER LOCATIONS, ENSURE OPENING HOLE IN ROOF SHEATHING (WHETHER NEW OR MODIFIED) MEETS THE OPENING REQUIREMENTS AS SET BY THE LOUVER MANUFACTURER. SEE SPECIFICATION.

11B NEW ATTIC VENT ROOF LOUVER EXHAUST LOCATION (50 SQ.IN. NET FREE AREA REQUIRED PER VENT - LOMANCO 750. SEE SPECIFICATION REGARDING COLOR).

11C NEW ATTIC EXHAUST RIDGE VENT LOCATION. SEE DETAILS ON DWG A-6. SEE SPEC..

11D NEW ATTIC GRAVITY INTAKE VENTILATOR LOCATION (THROAT SIZE 12"X12" = 144 SQ.IN. NET FREE AREA REQUIRED PER VENTILATOR - CARNES MODEL GI). SEE DETAIL 1/A-6.

11E NEW ATTIC VENT, ROOF DECK INTAKE LOCATION - OFF ROOF EDGE INSTALL C/W TAPERED TERMINATION (36 SQ.IN. NET FREE AREA REQD. PER 4'-0 LIN. LENGTH OF VENT - LOMENCO DECK-AIR DA-4.

12 EXIST. ROOF CAP TO BE REMOVED TO ALLOW FOR NEW ASPHALT ROOF SHINGLES AND UNDERLAYMENTS. SAVE EXIST. ROOF CAP FOR REUSE (UNLESS NOTED OTHERWISE DUE TO EXCESSIVE DAMAGE). REMOVE DENTS, SAND & PAINT TO MATCH PRE-FINISHED WEATHERED COPPER COLOR PRIOR TO REINSTALLATION.

13 EXISTING EXHAUST FAN ON PRE-FABRICATED METAL CURB TO BE REMOVED TO ALLOW FOR NEW ASPHALT ROOF SHINGLES AND UNDERLAYMENTS. SAVE EXISTING EXHAUST FAN ASSEMBLY, CURB CONSTRUCTION AND EXISTING DUCT FOR REUSE. REMOVE DENTS, SAND AND PAINT TO MATCH PRE-FINISHED WEATHERED COPPER COLOR PRIOR TO REINSTALL.

14 NEW PRE-FINISHED METAL CLADDING (WEATHERED COPPER) OVER NEW PEEL AND STICK MEMBRANE (HIGH TEMP.) TO LAP OVER NEW SECONDARY UNDERLAYMENT OVER EXIST. 1/2" PLYWOOD / 2X4 FRAMED BOX OUT UNDER EXIST. EAVE. COORDINATE LAP OF MEMBRANES TO PROMOTE WATER SHED AWAY FROM BLDG. ENVELOPE. COORDINATE WITH STEP FLASHING INSTALL TO PROMOTE WATER SHED AWAY FROM BLDG. ENVELOPE. SEE DET 7/A-5

15 AT EXISTING ROOF / BRICK WALL INTERFACE, PROVIDE NEW METAL FLASHING IN REGLET, NEW CAULKING / SEALANT AND NEW METAL COUNTER FLASHING. COORDINATE WITH EXISTING REGLET LOCATION, WHICH VARIES ON SITE.

16 AT OLD ROOF PENETRATION LOCATION, INFILL HOLE W/ NEW SHEATHING PATCH MATCHING EXIST. ADJACENT SHEATHING THICKNESS PRIOR TO APPLICATION OF NEW UNDERLAYMENT.

17 REINSTALL EXISTING SENSOR IN PREVIOUS EXIST. LOCATION. COORDINATE W/ NEW WORK.

18 NEW 7'-0" LONG PROTECTIVE SLEEVE OVER BOTTOM PORTION OF NEW RWL LOCATIONS ADJACENT TO SIDEWALK / ENTRY POINTS. SEE DET. 15/A-6.

19 NEW PRE-FINISHED SPLASH DIVERTER AT VALLEY INTERSECTION W/ NEW EAVESTROUGH.

20 AT EXISTING CONDUIT / REFRIGERATION LINE PENETRATIONS THROUGH NEW SOFFIT, HOLE IN SOFFIT IS TO BE TRIMMED OUT. DO NOT LEAVE BARE CUT EDGE OF SOFFIT.

21 NEW REPLACEMENT CAP MATCHING EXIST. DIMENSIONS, EXIST. MATERIAL AND NEW COLOR.

22 AT EXISTING LOOSE EXTERIOR WALL MECHANICAL LOUVER, REMOVE SEALANT AT PERIMETER AND WALL ANCHORS. PROVIDE NEW PERIMETER SEALANT AT MASONRY / LOUVER INTERFACE IN A NEAT WORKMANLIKE MANNER C/W NEW 1/4" DIA. X 2 1/4" MASONRY SCREW ANCHORS C/W GASKETED WASHER (SEE GENERAL NOTE 32). AT LARGE LOUVER LOCATION, PROVIDE FOUR ANCHORS. AT SMALL LOUVER LOCATION, PROVIDE TWO ANCHORS.

23 NEW PRE-FINISHED METAL RWL / CONDUIT / REFRIGERATION REPLACEMENT SHROUD (WEATHERED COPPER) TO ACCEPT LARGER RWL DIMENSION AND EXIST. ADJACENT ITEMS. VERIFY NEW SIZE REQUIRED ON SITE AND PROVIDE NEW 1/4" DIA. X 1 1/4" MASONRY SCREW ANCHORS C/W GASKETED WASHER (SEE GENERAL NOTE 32) TO ATTACH TO WALL.

FACTION ARCHITECTURE
1919 10th AVENUE SW,
CALGARY, AB
T3C 0K3
403-523-7943

DRAWINGS ARE NOT TO BE SCALED. Confirm all dimensions on site. Any apparent discrepancies in the Drawings shall be brought to the Architect's attention with time being of the essence

NOTES:

FACTION ARCHITECTURE INC. PROJ. NO.: 21104

SEAL:

SEAL:

ISSUED FOR:

NO.	DATE	DESCRIPTION

CONSULTANTS:

PROJECT FOR:

THE CHURCH OF JESUS CHRIST OF LATTER-DAY SAINTS

PROJECT NAME:

VICTORIA 2, 3 ROOF
VICTORIA BRITISH COLUMBIA STAKE

ROOF RESTORATION

PROJECT ADDRESS:

701 MANN AVENUE
VICTORIA, BC, V8Z 6E7

DRAWING DESCRIPTION:

ROOF PLAN - NEW

PROJECT DESIGNATION: 515-5169-2101-0101

WORK ORDER NO.: -

PROPERTY NO.: 515-5169

PROJECT TYPE.:

PLOT SCALE: 1/8"=1'-0"

DATE ISSUED: JUNE 2021

REVIEWED: EZ/NH

BY: EZ

DRAWING NO.: A-3

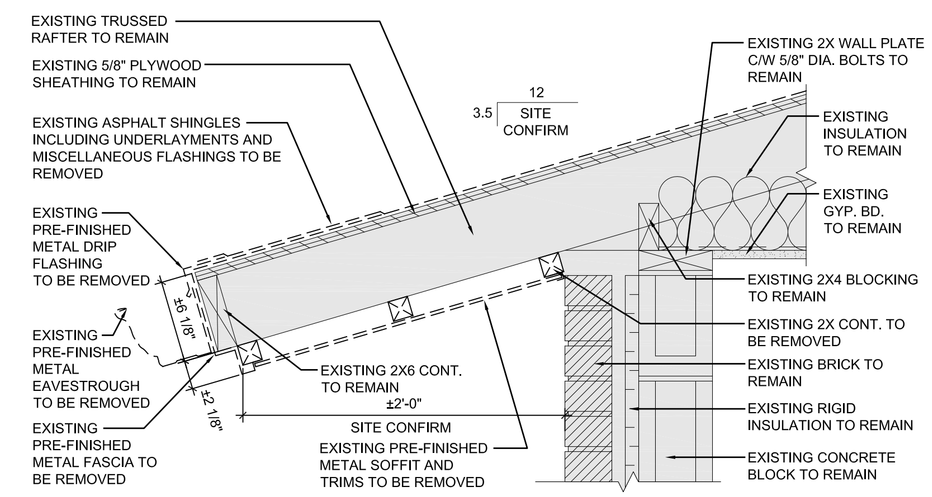

1 ROOF / FASCIA / SOFFIT DETAIL - DEMO

A-4 | 1 1/2" = 1'-0"

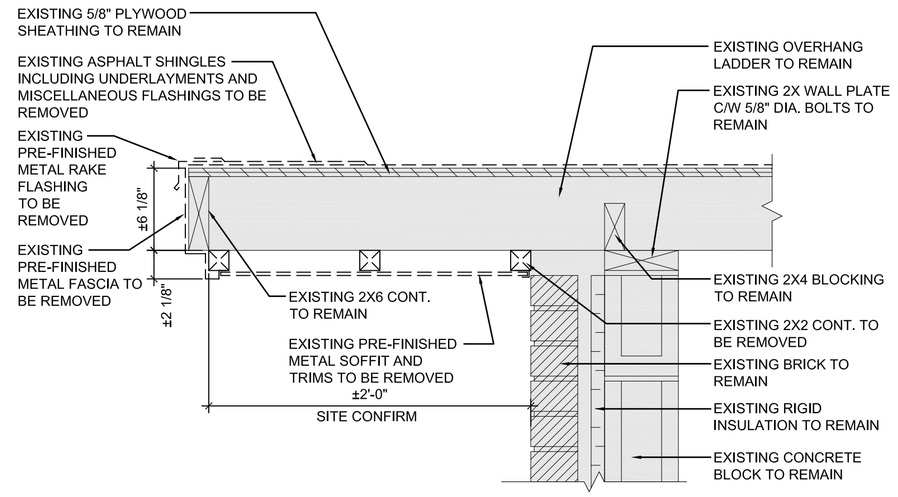

2 ROOF / FASCIA / SOFFIT DETAIL - DEMO

A-4 | 1 1/2" = 1'-0"

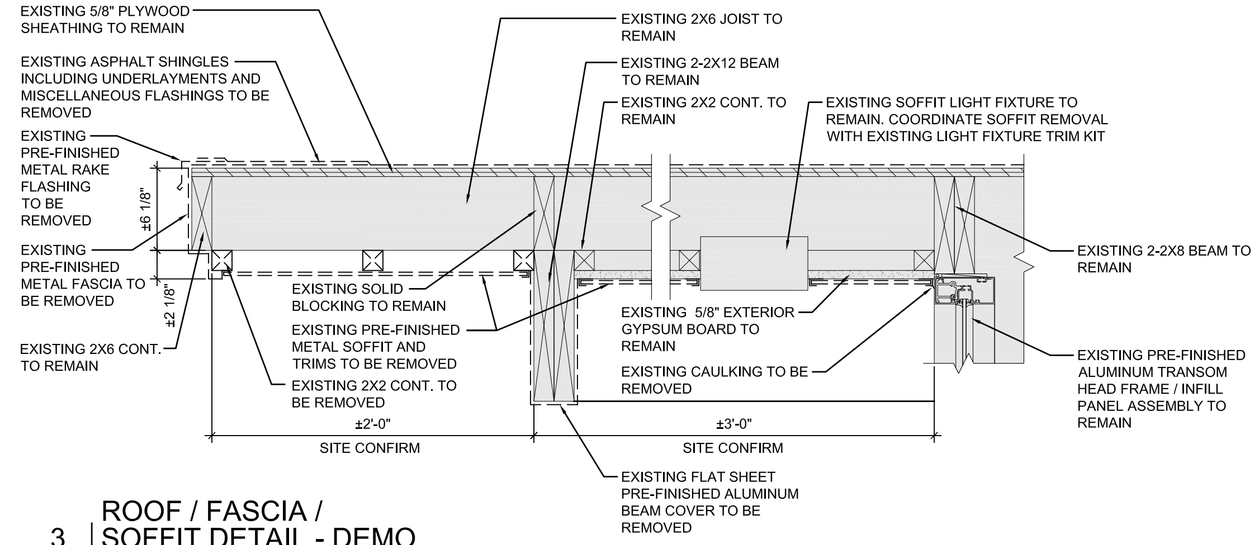

3 ROOF / FASCIA / SOFFIT DETAIL - DEMO

A-4 | 1 1/2" = 1'-0"

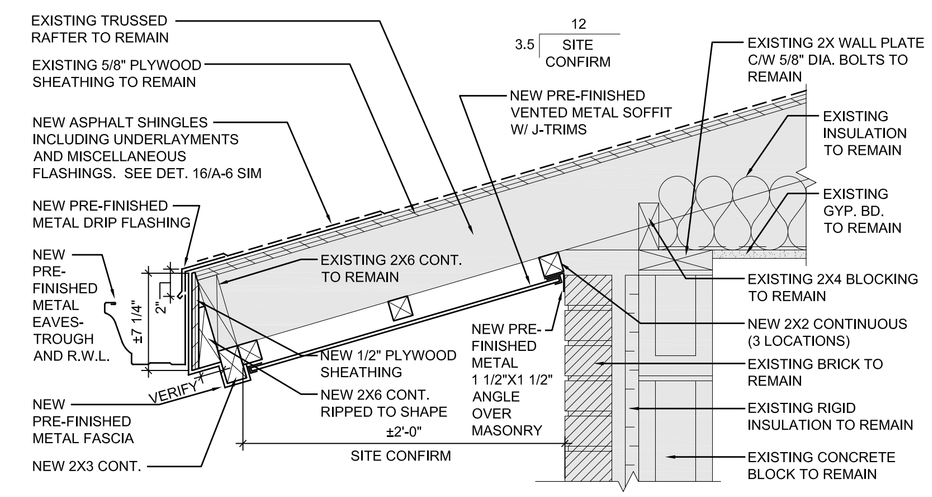

4 ROOF / FASCIA / SOFFIT DETAIL - NEW

A-4 | 1 1/2" = 1'-0"

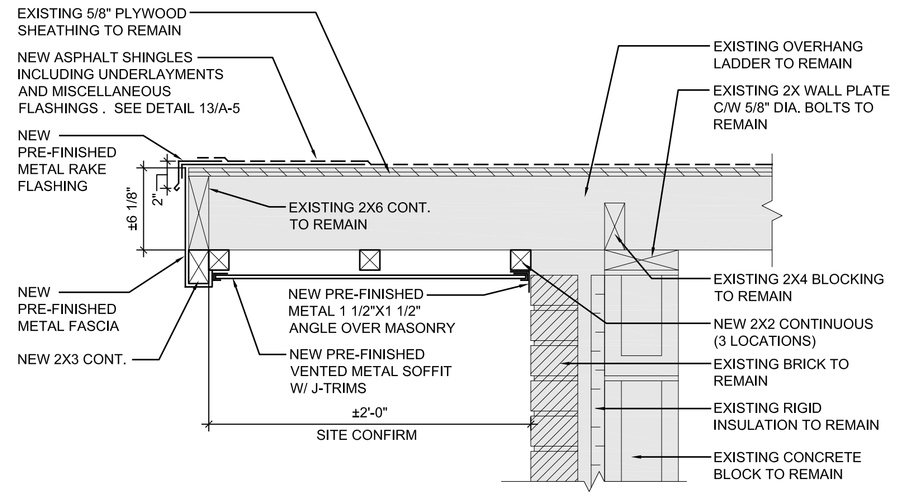

5 ROOF / FASCIA / SOFFIT DETAIL - NEW

A-4 | 1 1/2" = 1'-0"

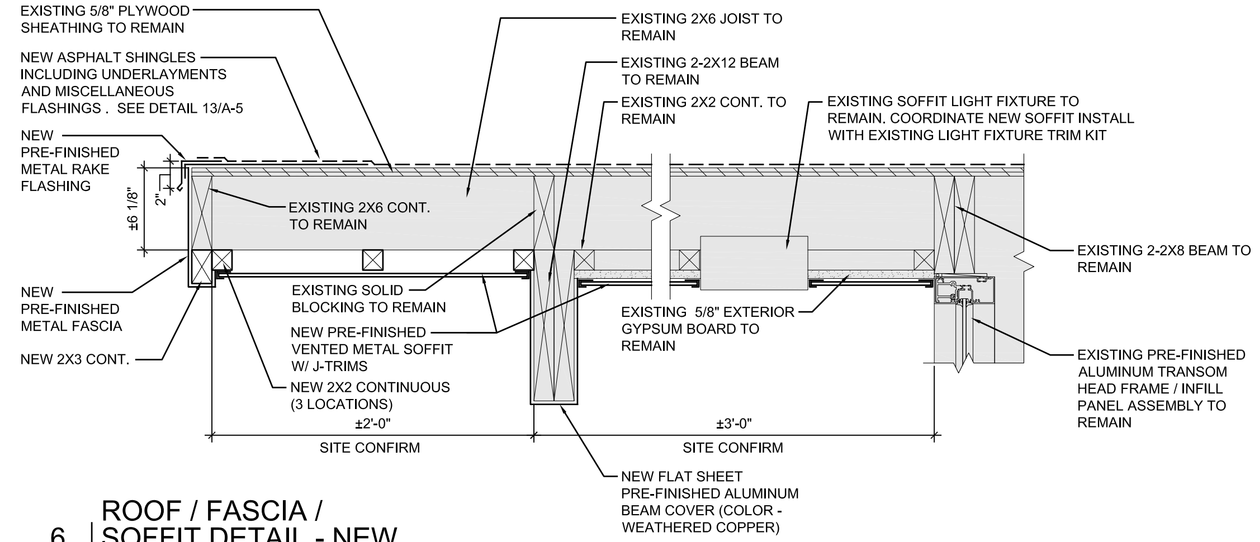

6 ROOF / FASCIA / SOFFIT DETAIL - NEW

A-4 | 1 1/2" = 1'-0"

NOTE:
SAW CUT REQUIRED TO CLEAN OUT AND REMOVE DEBRIS AT ALL OLD REGLET LOCATIONS.

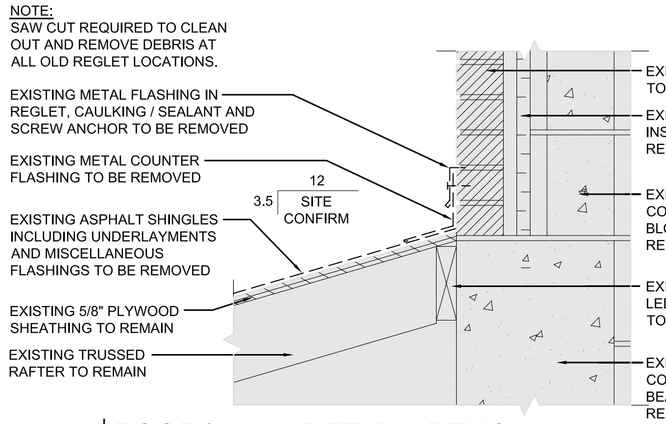

7 ROOF / WALL DETAIL - DEMO

A-4 | 1 1/2" = 1'-0"

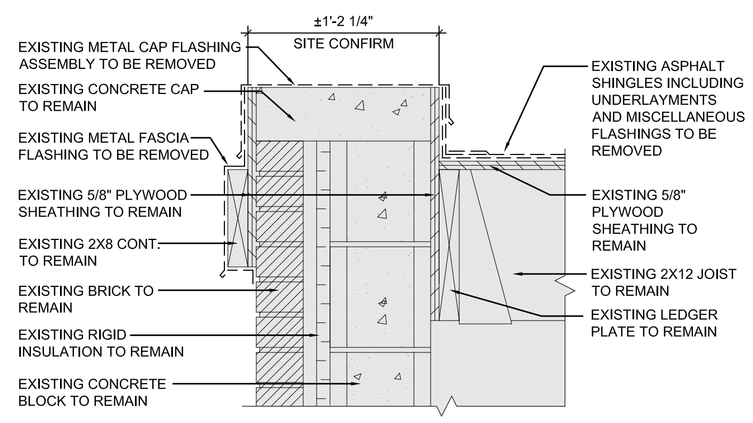

8 FIRE WALL CAP DETAIL - DEMO

A-4 | 1 1/2" = 1'-0"

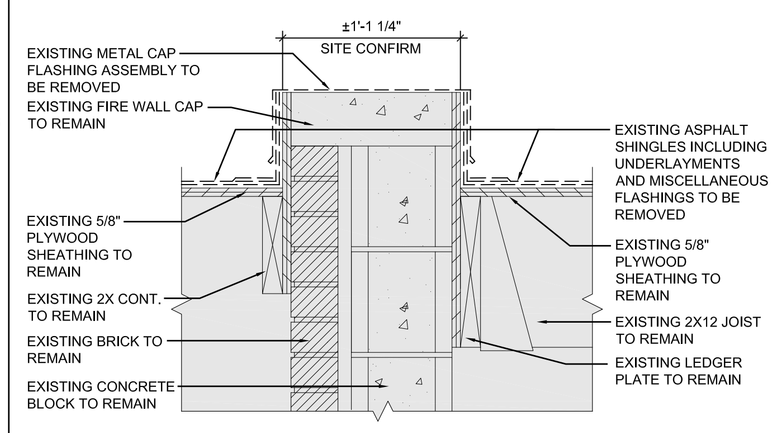

9 FIRE WALL CAP DETAIL - DEMO

A-4 | 1 1/2" = 1'-0"

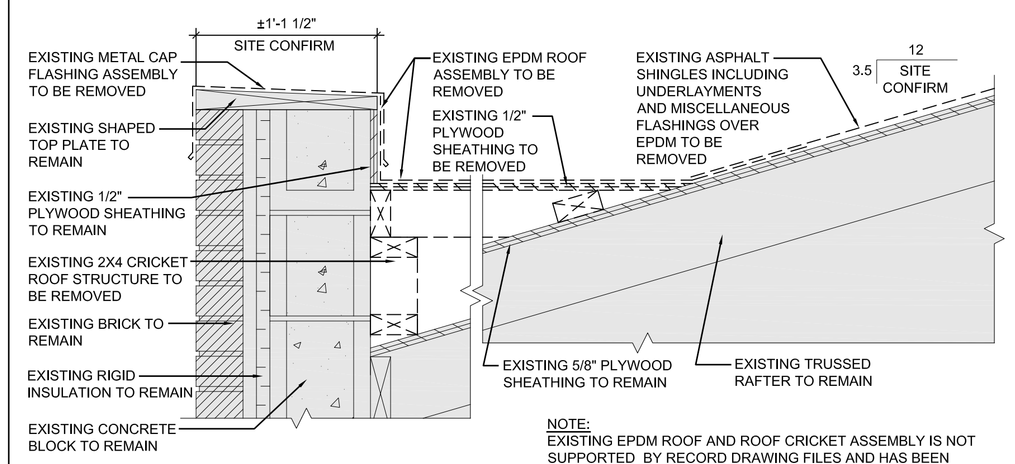

NOTE:
EXISTING EPDM ROOF AND ROOF CRICKET ASSEMBLY IS NOT SUPPORTED BY RECORD DRAWING FILES AND HAS BEEN ASSEMBLED BASED ON ESTIMATE OF WHAT EXISTS ON SITE. PRIOR TO NEW CONSTRUCTION, VERIFY ON SITE EXISTING STRUCTURE THAT DOES EXIST AND CONTACT CONSULTANT IF ANY CONFLICTS EXIST THAT NEED TO BE RESOLVED.

10 FIRE WALL CAP / EPDM DETAIL - DEMO

A-4 | 1 1/2" = 1'-0"

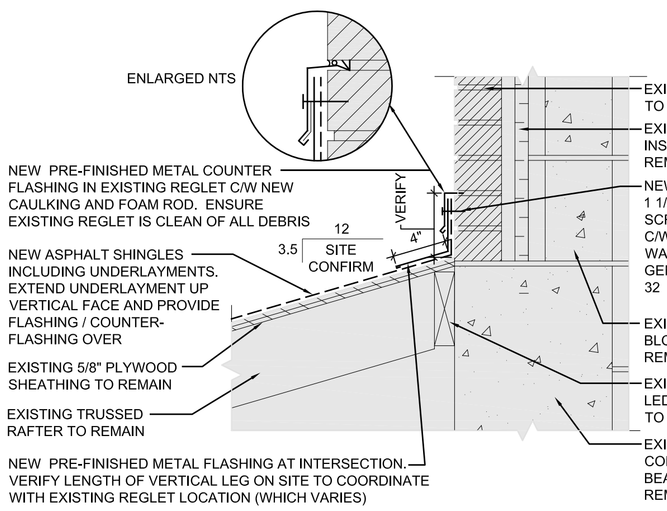

11 ROOF/WALL DETAIL - NEW

A-4 | 1 1/2" = 1'-0"

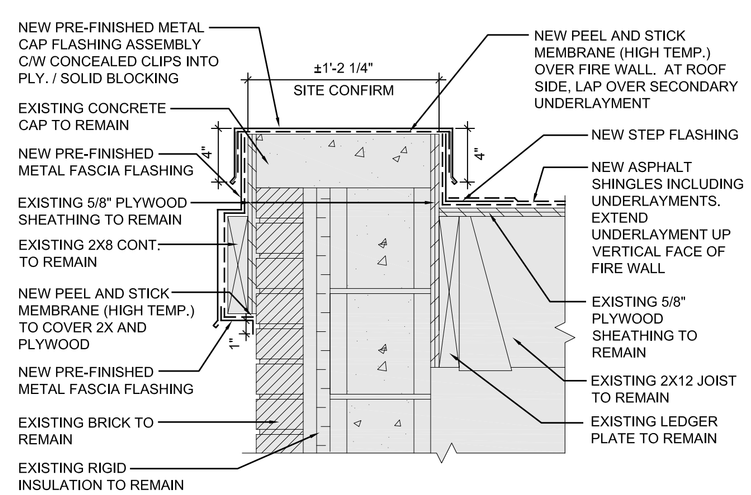

12 FIRE WALL CAP DETAIL - NEW

A-4 | 1 1/2" = 1'-0"

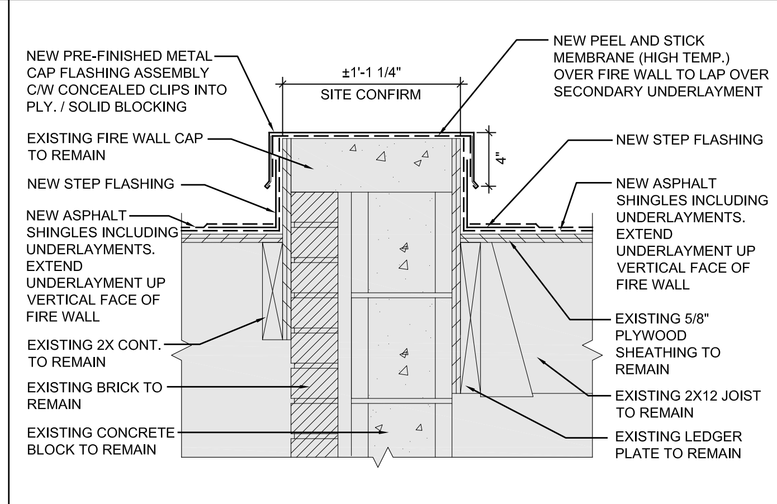

13 FIRE WALL CAP DETAIL - NEW

A-4 | 1 1/2" = 1'-0"

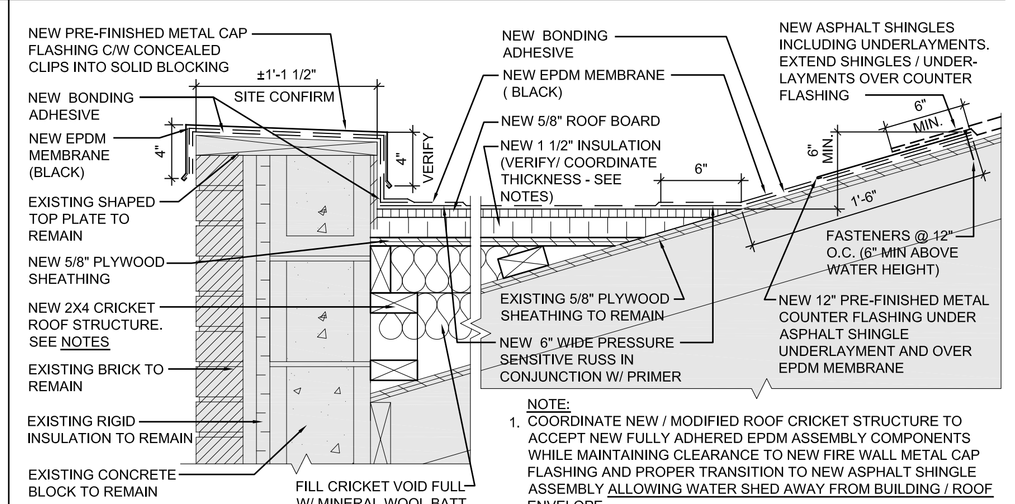

NOTE:
1. COORDINATE NEW / MODIFIED ROOF CRICKET STRUCTURE TO ACCEPT NEW FULLY ADHERED EPDM ASSEMBLY COMPONENTS WHILE MAINTAINING CLEARANCE TO NEW FIRE WALL METAL CAP FLASHING AND PROPER TRANSITION TO NEW ASPHALT SHINGLE ASSEMBLY ALLOWING WATER SHED AWAY FROM BUILDING / ROOF ENVELOPE.
2. ASPHALT SHINGLES MUST BE SEPARATED FROM MAKING CONTACT WITH EPDM MEMBRANE AT ALL INTERFACES WITH PRE-FINISHED METAL COUNTER FLASHING. ABOVE DETAIL INDICATES INTERFACE WHEN ASPHALT SHINGLE ASSEMBLY IS HIGHER THAN EPDM ASSEMBLY. COUNTER FLASHING IS ALSO REQUIRED WHEN EPDM ASSEMBLY IS HIGHER THAN ASPHALT SHINGLE ASSEMBLY (AT WATER OUTFALL AREA).

14 FIRE WALL CAP / EPDM DETAIL - NEW

A-4 | 1 1/2" = 1'-0"

LEGEND: (TYP. TO DETAILS)

TONE DENOTES APPROXIMATE EXISTING CONSTRUCTION TO REMAIN

NOTE: CONFIRM EXISTING CONDITIONS ON SITE FOLLOWING DEMOLITION.

FACTION ARCHITECTURE

1919 10th AVENUE SW,
CALGARY, AB
T3C 0K3
403-523-7943

DRAWINGS ARE NOT TO BE SCALED. Confirm all dimensions on site. Any apparent discrepancies in the Drawings shall be brought to the Architect's attention with time being of the essence

NOTES:

FACTION ARCHITECTURE INC. PROJ. NO.: 21104

SEAL:

SEAL:

ISSUED FOR:

NO.	DATE	DESCRIPTION

CONSULTANTS:

PROJECT FOR:

THE CHURCH OF JESUS CHRIST OF LATTER-DAY SAINTS

PROJECT NAME:

VICTORIA 2, 3 ROOF

VICTORIA BRITISH COLUMBIA STAKE

ROOF RESTORATION

PROJECT ADDRESS:

701 MANN AVENUE
VICTORIA, BC, V8Z 6E7

DRAWING DESCRIPTION:

DETAILS

PROJECT DESIGNATION: 515-5169-2101-0101

WORK ORDER NO.: -

PROPERTY NO.: 515-5169

PROJECT TYPE.: R&I

PLOT SCALE: VARIES

DATE ISSUED: JUNE 2021

REVIEWED: NH/EZ

BY: EZ

DRAWING NO.: A-4

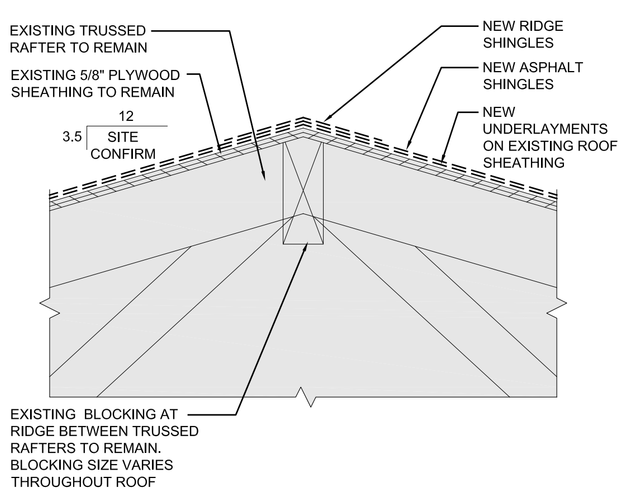

1 | RIDGE DETAIL - NEW
A-5 | 1 1/2" = 1'-0"

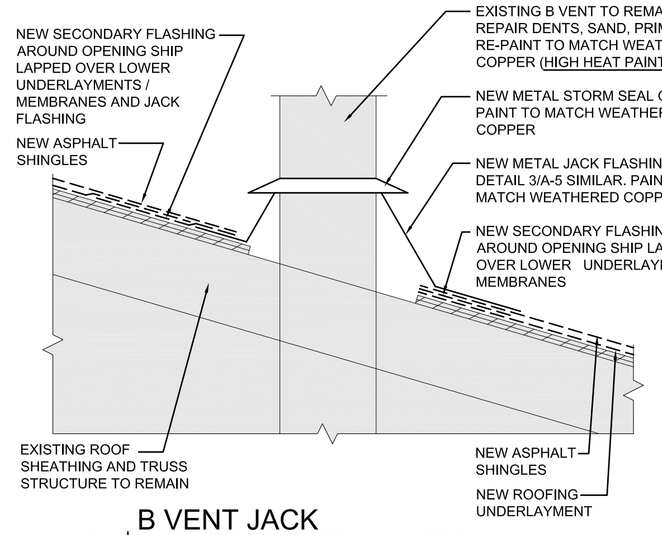

2 | B VENT JACK FLASHING DETAIL - NEW
A-5 | 1 1/2" = 1'-0"

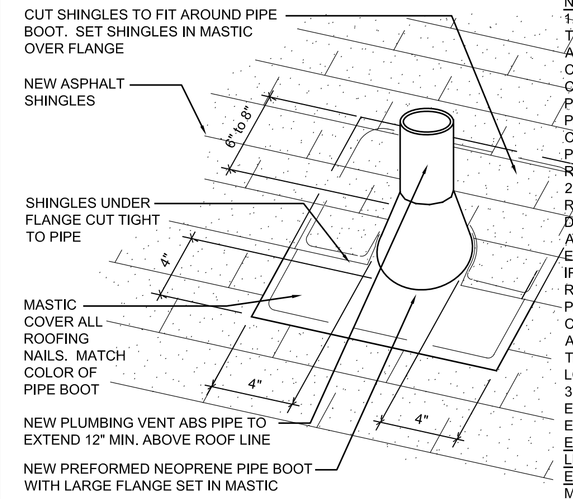

NOTE:
1. AT ROOF VENT LOCATIONS THAT ARE NOT IN CONFLICT AND CAN REMAIN IN PLACE, CUT EXISTING COPPER / CAST IRON PLUMBING VENT PIPE BELOW ROOF LINE AND PROVIDE MJ CLAMP/ COUPLING TO ALLOW ABS PIPE EXTENSION THROUGH ROOF LINE.
2. AT PLUMBING VENT REQUIRED TO BE RELOCATED DUE TO ADJACENT CONFLICT AT ROOF LEVEL, CUT EXISTING COPPER / CAST IRON PLUMBING VENT PIPE IN ROOF ATTIC SPACE AND PROVIDE MJ CLAMP/ COUPLING TO ALLOW NEW ABS PIPE EXTENSION THROUGH TO NEW ROOF LOCATION.
3. DIAMETER OF NEW PIPE EXTENSION TO MATCH EXISTING PIPE DIAMETER. IF EXISTING VENT DIAMETER IS LESS THAN 2", NEW EXTENSION PIPE DIAMETER MUST BE MINIMUM 2". PROVIDE FITTINGS AND MJ CLAMP ACCORDINGLY TO MEET MINIMUM CODE DIAMETER REQUIREMENTS.

3 | ROOF JACK DETAIL - NEW
A-5 | 1 1/2" = 1'-0"

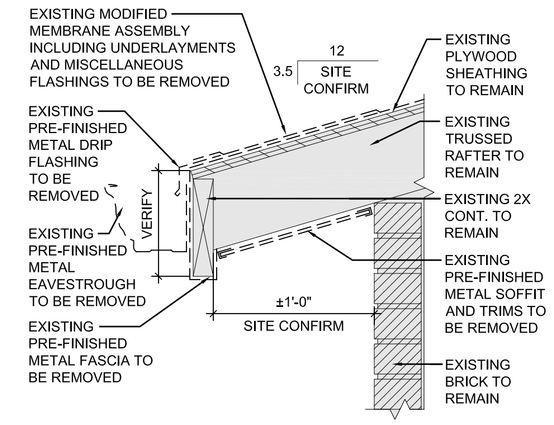

4 | SHED ROOF / FASCIA / SOFFIT DETAIL - DEMO
A-5 | 1 1/2" = 1'-0"

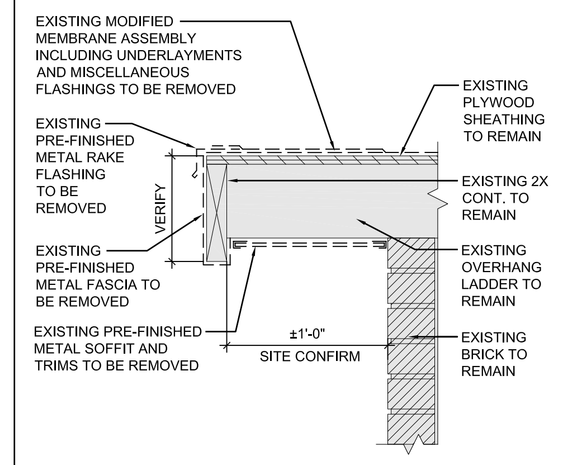

5 | SHED ROOF / FASCIA / SOFFIT DETAIL - DEMO
A-5 | 1 1/2" = 1'-0"

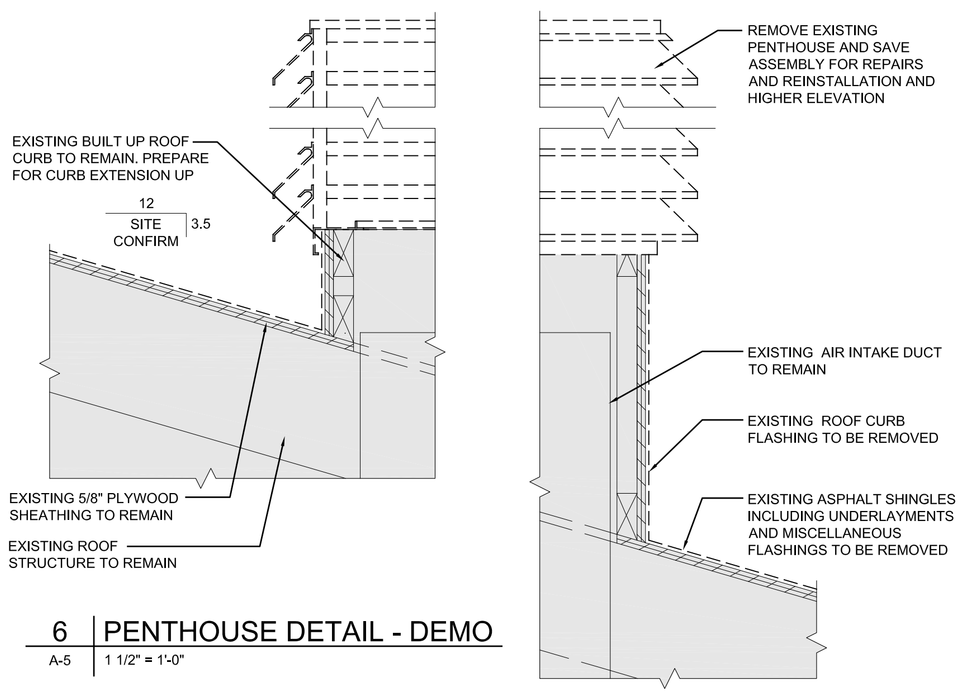

6 | PENTHOUSE DETAIL - DEMO
A-5 | 1 1/2" = 1'-0"

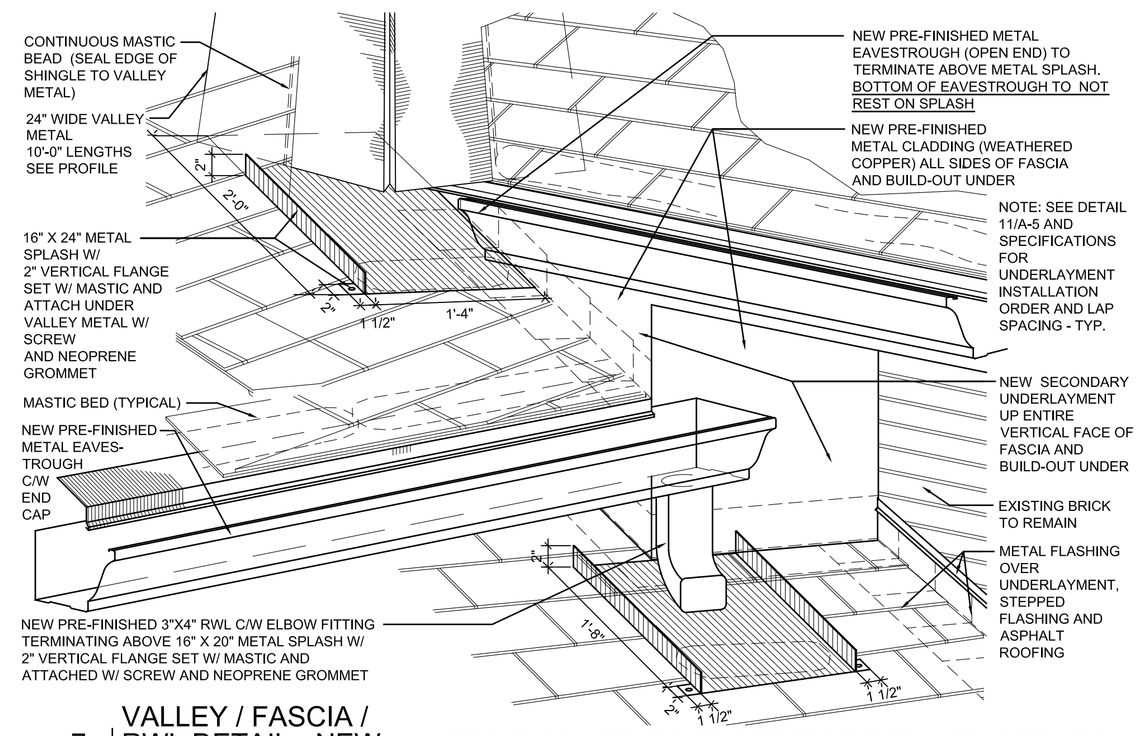

7 | VALLEY / FASCIA / RWL DETAIL - NEW
A-5 | NTS

NOTE: EXISTING RWL / PIPE GOING INTO LOWER ROOF IS TO BE TERMINATED AND PERMANENTLY CAPPED WITHIN LOWER ROOF VOLUME. REPAIR ROOF PENETRATION WITH PLYWOOD SHEATHING TO MATCH EXISTING ADJACENT PRIOR TO APPLICATION OF NEW ROOF UNDERLAYMENTS.

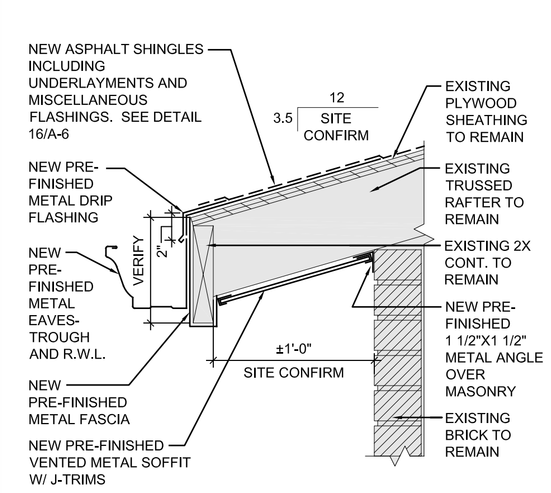

8 | SHED ROOF / FASCIA / SOFFIT DETAIL - NEW
A-5 | 1 1/2" = 1'-0"

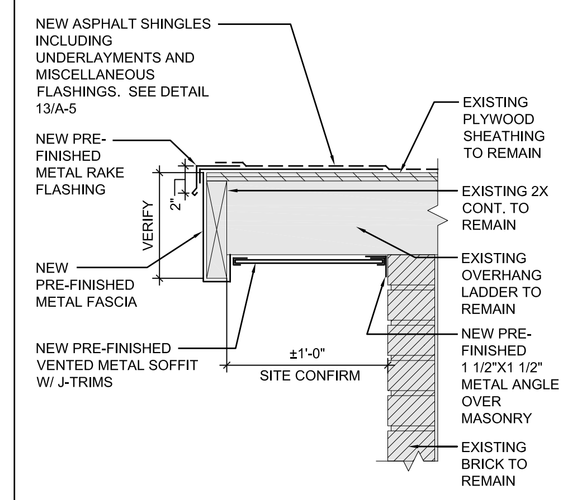

9 | SHED ROOF / FASCIA / SOFFIT DETAIL - NEW
A-5 | 1 1/2" = 1'-0"

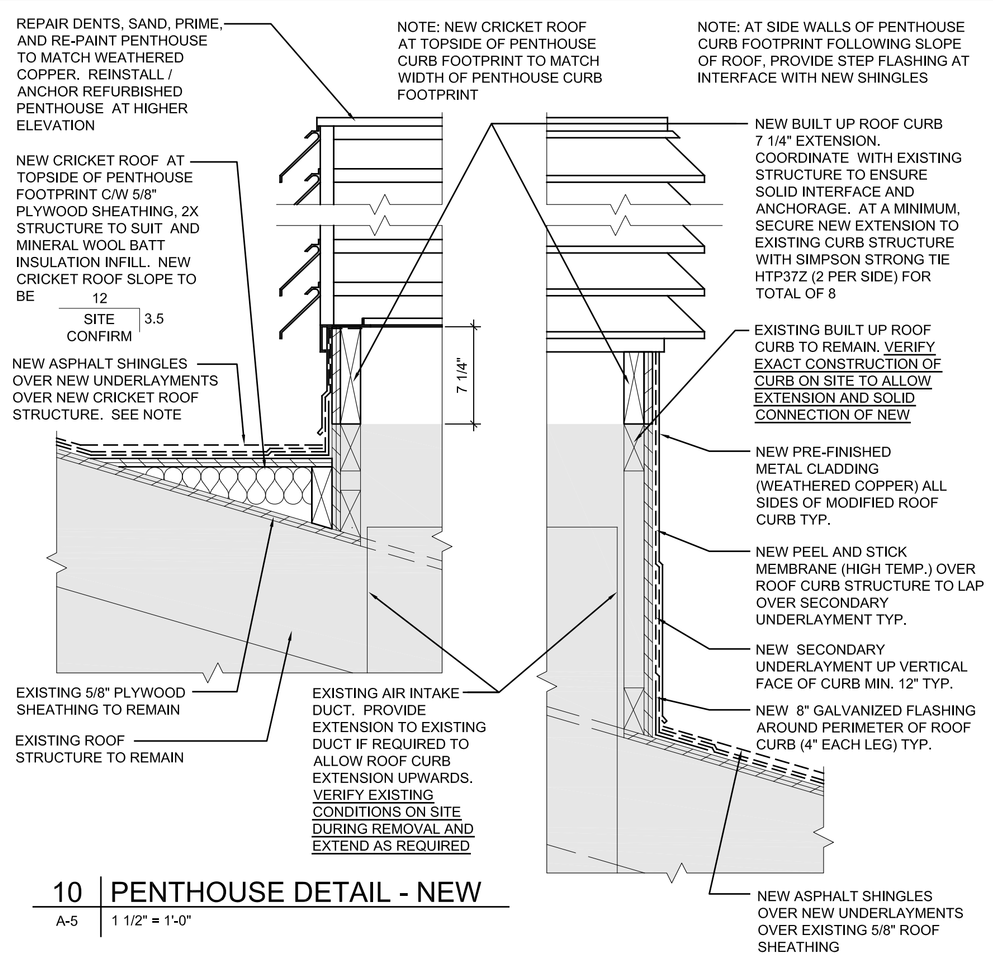

10 | PENTHOUSE DETAIL - NEW
A-5 | 1 1/2" = 1'-0"

LEGEND: (TYP. TO DETAILS)

TONE DENOTES APPROXIMATE EXISTING CONSTRUCTION TO REMAIN

NOTE: CONFIRM EXISTING CONDITIONS ON SITE FOLLOWING DEMOLITION.

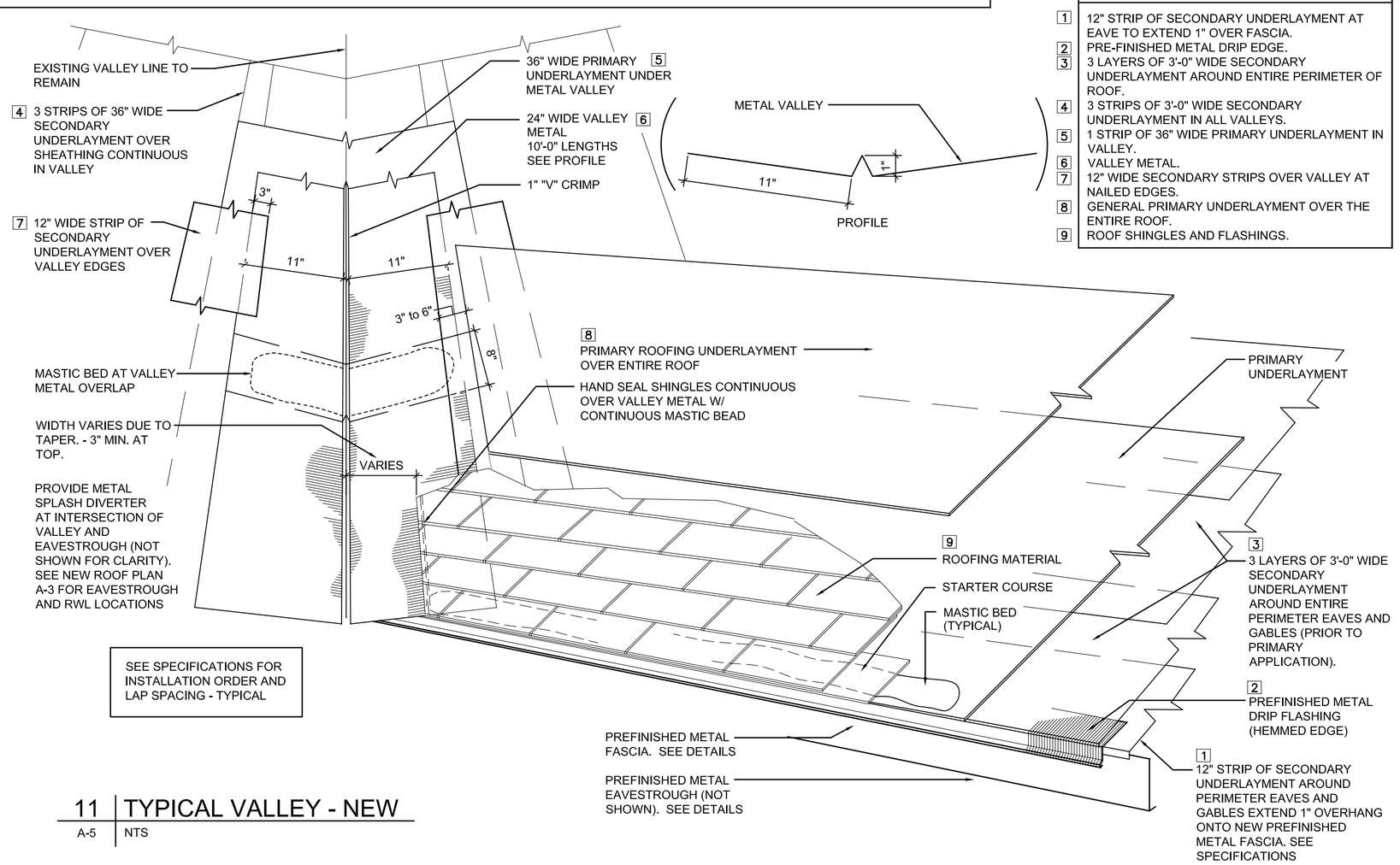

SEE SPECIFICATIONS FOR INSTALLATION ORDER AND LAP SPACING - TYPICAL

11 | TYPICAL VALLEY - NEW
A-5 | NTS

SEQUENCE OF NEW ROOFING MATERIALS

1. 12" STRIP OF SECONDARY UNDERLAYMENT AT EAVE TO EXTEND 1" OVER FASCIA.
2. PRE-FINISHED METAL DRIP EDGE.
3. 3 LAYERS OF 3'-0" WIDE SECONDARY UNDERLAYMENT AROUND ENTIRE PERIMETER OF ROOF.
4. 3 STRIPS OF 3'-0" WIDE SECONDARY UNDERLAYMENT IN ALL VALLEYS.
5. 1 STRIP OF 36" WIDE PRIMARY UNDERLAYMENT IN VALLEY.
6. VALLEY METAL.
7. 12" WIDE SECONDARY STRIPS OVER VALLEY AT NAILED EDGES.
8. GENERAL PRIMARY UNDERLAYMENT OVER THE ENTIRE ROOF.
9. ROOF SHINGLES AND FLASHINGS.

12 | NOT USED
A-5

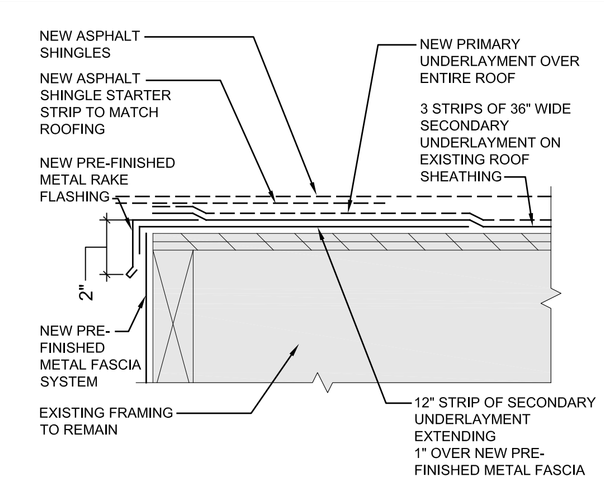

13 | RAKE FLASHING/ ENLARGED LAPS DETAIL - NEW
A-5 | 3" = 1'-0"

FACTION ARCHITECTURE INC.

1919 10th AVENUE SW,
CALGARY, AB
T3C OK3
403-523-7943

DRAWINGS ARE NOT TO BE SCALED. Confirm all dimensions on site. Any apparent discrepancies in the Drawings shall be brought to the Architect's attention with time being of the essence

NOTES:

FACTION ARCHITECTURE INC. PROJ. NO.: 21104

SEAL:

SEAL:

ISSUED FOR:

NO.	DATE	DESCRIPTION

CONSULTANTS:

PROJECT FOR:

THE CHURCH OF JESUS CHRIST OF LATTER-DAY SAINTS

PROJECT NAME:

VICTORIA 2, 3 ROOF
VICTORIA BRITISH COLUMBIA STAKE

ROOF RESTORATION

PROJECT ADDRESS:
701 MANN AVENUE
VICTORIA, BC, V8Z 6E7

DRAWING DESCRIPTION:
DETAILS

PROJECT DESIGNATION: 515-5169-2101-0101
WORK ORDER NO.: -
PROPERTY NO.: 515-5169
PROJECT TYPE.: R&I
PLOT SCALE: VARIES
DATE ISSUED: JUNE 2021
REVIEWED: NH/EZ
BY: EZ
DRAWING NO.: A-5

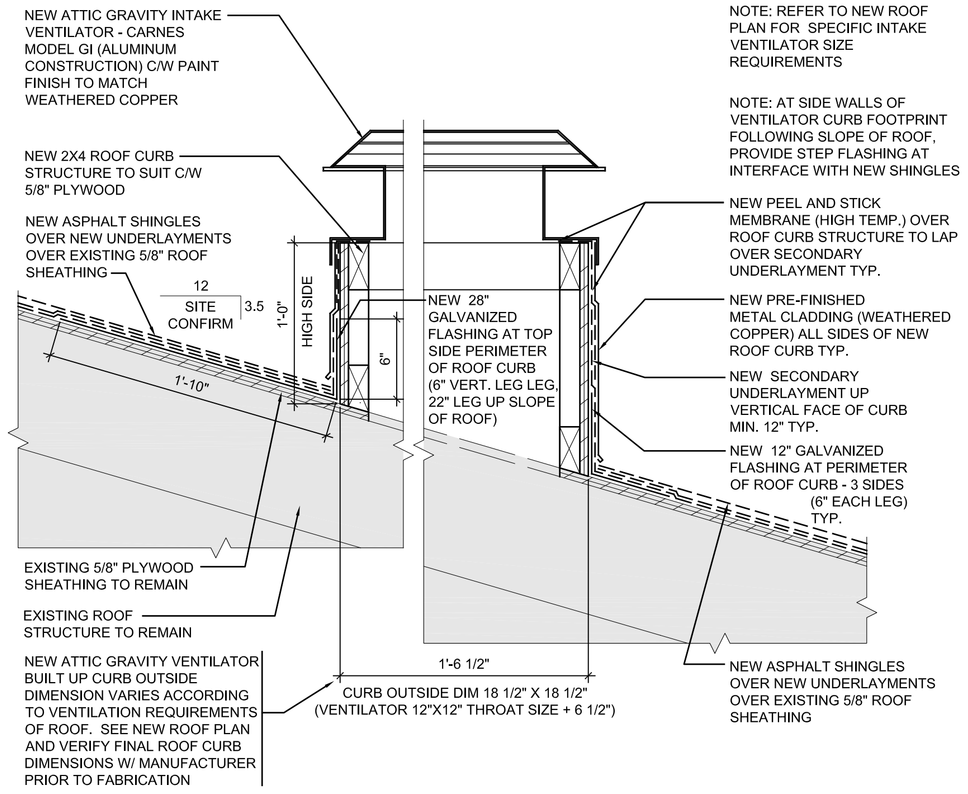

1 | VENTILATOR ROOF CURB DETAIL - NEW
A-6 | 1 1/2" = 1'-0"

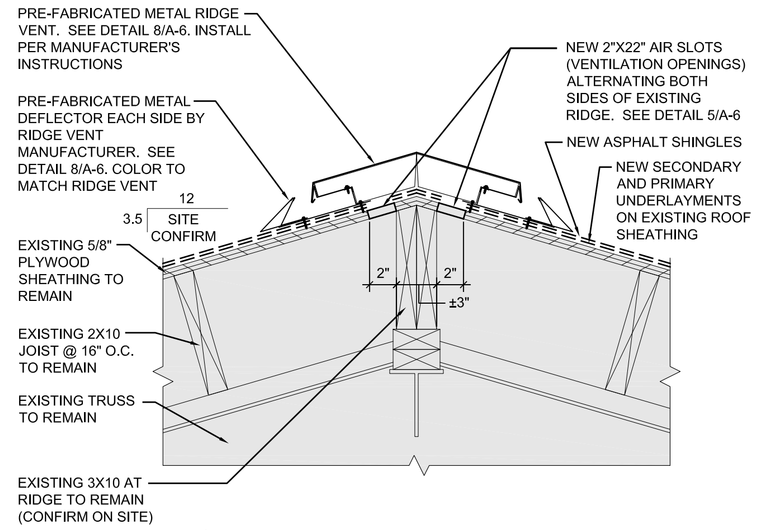

2 | RIDGE VENT DETAIL - NEW
A-6 | 1 1/2" = 1'-0"

3 | NOT USED
A-6

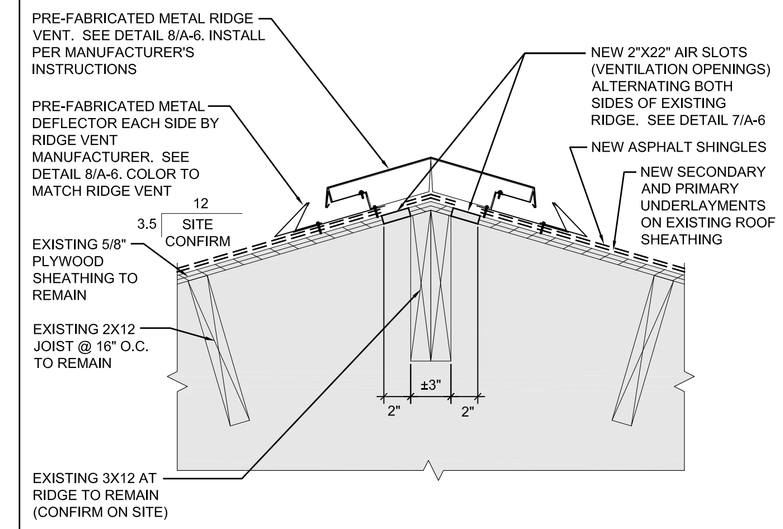

4 | RIDGE VENT DETAIL - NEW
A-6 | 1 1/2" = 1'-0"

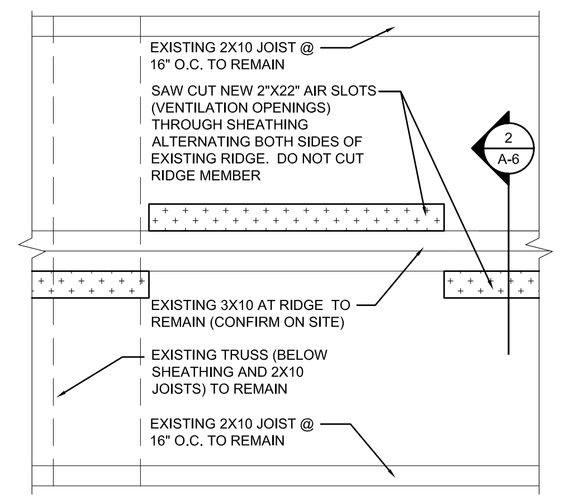

5 | RIDGE VENT SLOT DETAIL - NEW
A-6 | 1 1/2" = 1'-0"

6 | NOT USED
A-6

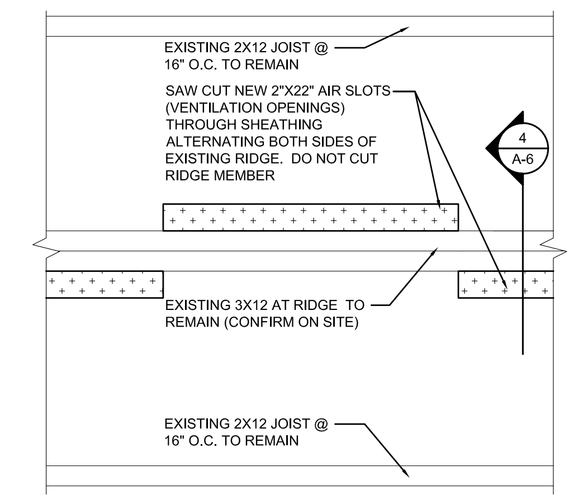

7 | RIDGE VENT SLOT DETAIL - NEW
A-6 | 1 1/2" = 1'-0"

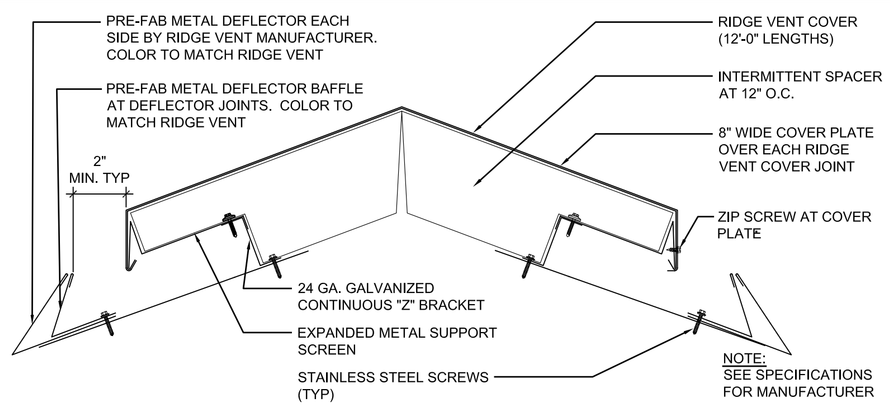

8 | RIDGE VENT - NEW
A-6 | NTS

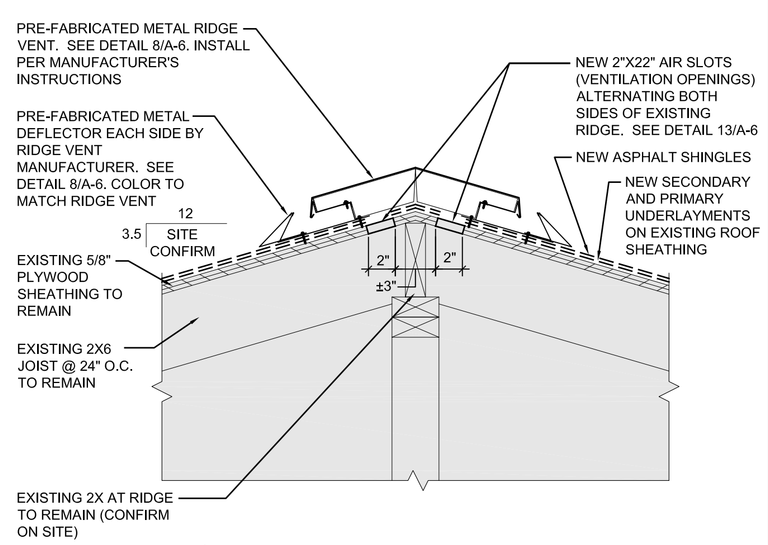

9 | RIDGE VENT DETAIL - NEW
A-6 | 1 1/2" = 1'-0"

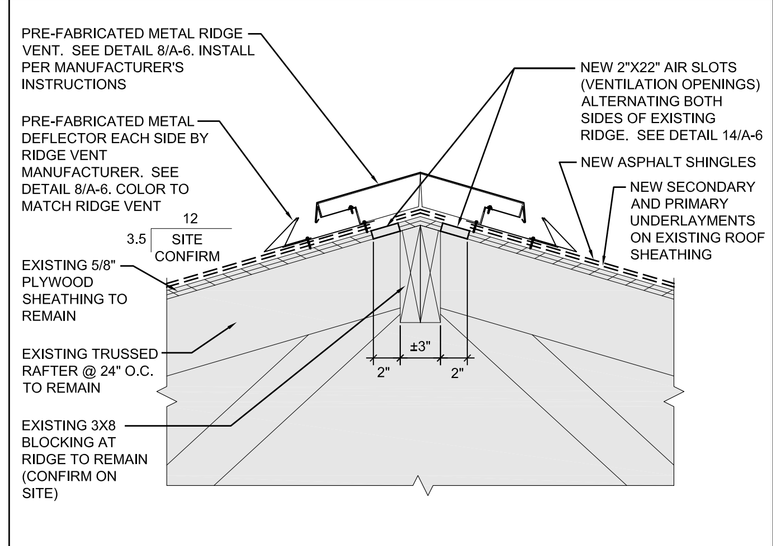

10 | RIDGE VENT DETAIL - NEW
A-6 | 1 1/2" = 1'-0"

NOTE:
1. FOR LOWER ROOF TO GRADE RWL SUPPORT, PROVIDE MINIMUM 2 DOWNSPOUT STRAPS APPROX. 1 FOOT FROM BOTTOM AND TOP.
2. FOR UPPER ROOF TO GRADE RWL SUPPORT, PROVIDE MINIMUM 3 DOWNSPOUT STRAPS APPROX. 1 FOOT (FROM BOTTOM AND TOP) AND 1 IN THE MIDDLE OF VERTICAL RUN.
3. AT TRANSITION INTO EXISTING AT GRADE RAIN WATER PIPING, PROVIDE DOWNSPOUT REDUCER/ ADAPTER (AQUABARREL, GUTTERWORKS MFG. INC. OR APPROVED EQUAL) TO ALLOW FIT INTO EXISTING PIPE / NEW CAP. BOTTOM OF NEW REDUCER/ ADAPTER TO FIT FULLY INSIDE EXISTING AT GRADE PIPE AND EXTEND MINIMUM 1" PAST NEW TOP CAP.
4. AT TOP OF EXISTING AT GRADE PIPE, PROVIDE NEW COVER CAP (TO PREVENT SOIL / DEBRIS ENTRY) TO FIT OVER PIPE DIAMETER C/W INSERT HOLE IN SHAPE OF RWL REDUCER / ADAPTER. TURN OVER ALL OLD PIPE CAPS TO OWNER.
5. EXPOSE ALL BURIED IN GRADE PIPING COVERED WITH SOIL / ROOT GROWTH. PROVIDE NEW COUPLING (GLUED) TO EXTEND BURIED PIPE TO DAYLIGHT TO ALLOW PROPER UNINTERRUPTED INTERFACE OF EXISTING BURIED PIPING W/ NEW CAP / ADAPTER / RWL / AND SLEEVE.
6. AT ALL RWL LOCATIONS ADJACENT TO SIDEWALK / ENTRY POINTS, BOTTOM 7'-0" OF RWL IS TO RECEIVE SLEEVE OVER TO PROTECT DOWNSPOUT FROM DAMAGE. PROTECTIVE SLEEVE REQUIRED AT 5 ENTRY LOCATIONS.

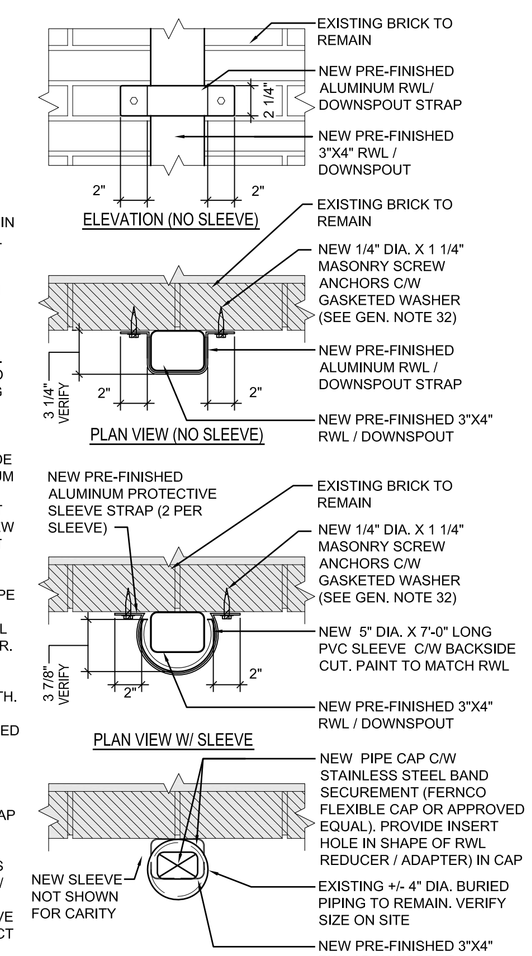

15 | RWL / DOWNSPOUT / SLEEVE DETAIL - NEW
A-6 | 1 1/2" = 1'-0"

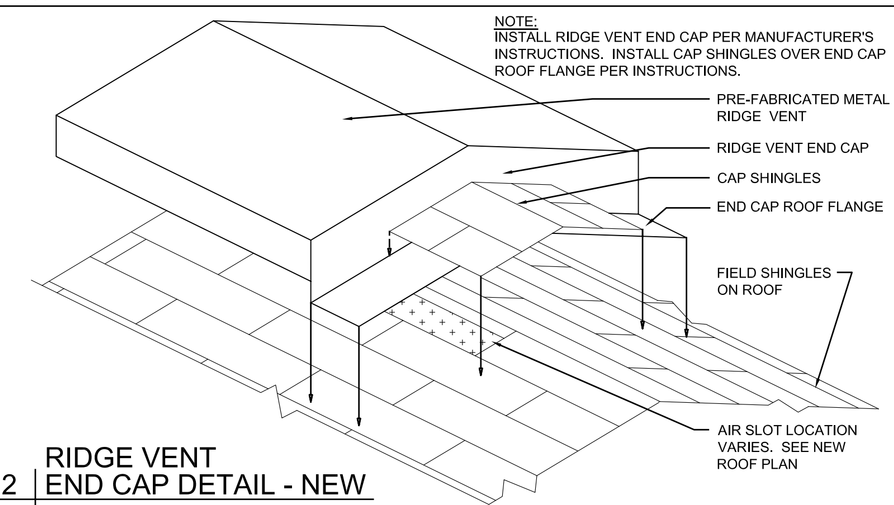

12 | RIDGE VENT END CAP DETAIL - NEW
A-6 | NTS

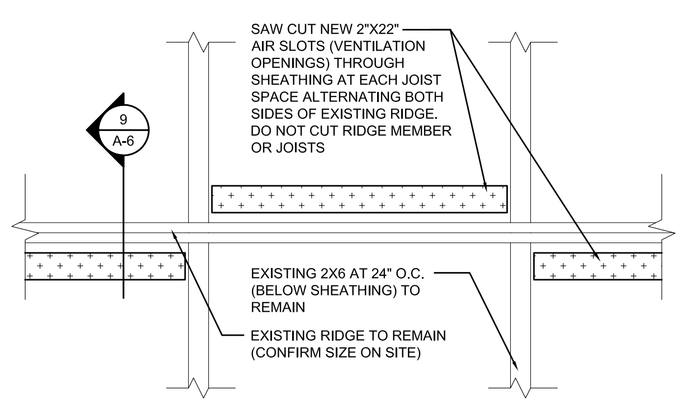

13 | RIDGE VENT SLOT DETAIL - NEW
A-6 | 1 1/2" = 1'-0"

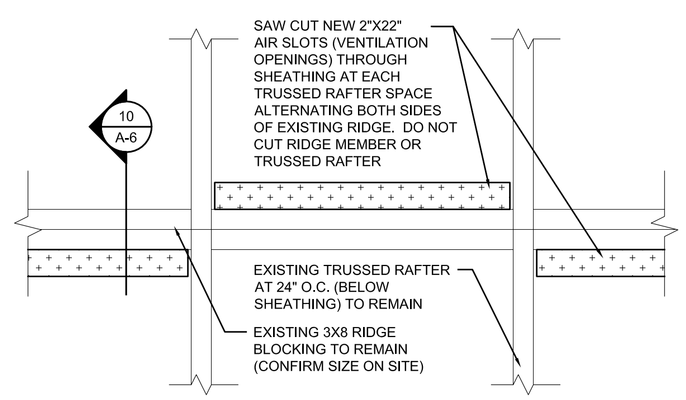

14 | RIDGE VENT SLOT DETAIL - NEW
A-6 | 1 1/2" = 1'-0"

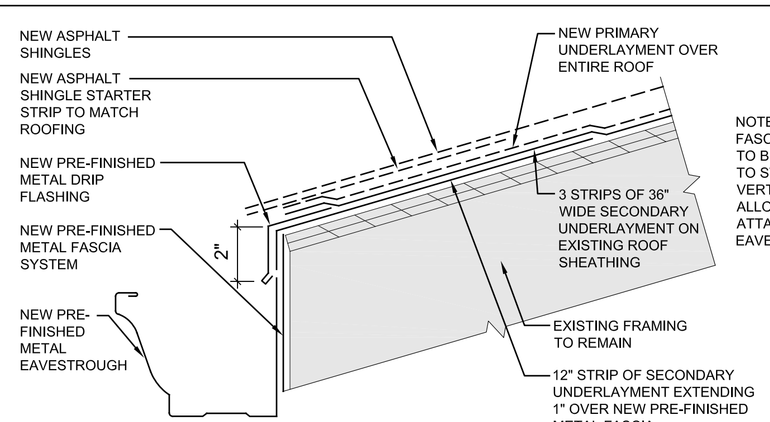

16 | DRIP FLASHING / ENLARGED LAPS DETAIL - NEW
A-6 | 3" = 1'-0"

LEGEND: (TYP. TO DETAILS)

TONE DENOTES APPROXIMATE EXISTING CONSTRUCTION TO REMAIN

NOTE: CONFIRM EXISTING CONDITIONS ON SITE FOLLOWING DEMOLITION.

FACTION ARCHITECTURE INC.

1919 10th AVENUE SW,
CALGARY, AB
T3C OK3
403-523-7943

DRAWINGS ARE NOT TO BE SCALED. Confirm all dimensions on site. Any apparent discrepancies in the Drawings shall be brought to the Architect's attention with time being of the essence

NOTES:

FACTION ARCHITECTURE INC. PROJ. NO.: 21104

SEAL:

SEAL:

ISSUED FOR:

NO.	DATE	DESCRIPTION

CONSULTANTS:

PROJECT FOR:

THE CHURCH OF JESUS CHRIST OF LATTER-DAY SAINTS

PROJECT NAME:

VICTORIA 2, 3 ROOF

VICTORIA BRITISH COLUMBIA STAKE

ROOF RESTORATION

PROJECT ADDRESS:

701 MANN AVENUE
VICTORIA, BC, V8Z 6E7

DRAWING DESCRIPTION:

DETAILS

PROJECT DESIGNATION: 515-5169-2101-0101

WORK ORDER NO.: -

PROPERTY NO.: 515-5169

PROJECT TYPE.: R&I

PLOT SCALE: VARIES

DATE ISSUED: JUNE 2021

REVIEWED: NH/EZ

BY: EZ

DRAWING NO.: A-6

VICTORIA 2, 3 ROOF

VICTORIA BRITISH COLUMBIA STAKE

701 MANN AVENUE
VICTORIA, BC, V8Z 6E7

ROOF RESTORATION

THE CHURCH OF
JESUS CHRIST
OF LATTER-DAY SAINTS

FACTION ARCHITECTURE INC.
1919 10th Avenue S.W.
Calgary, Alberta,
T3C 0K3
(403) 523-7943

BID SET

JUNE 2021

FACTION ARCHITECTURE INC. FILE NUMBER: 21104
PROJECT NUMBER: 515-5169-2101-0101

SET NUMBER

DRAWING LIST

PAGE NO.	DRAWING NO.	DRAWING TITLE
1	ACS	COVER SHEET AND DRAWING LIST
2	A-1	VENTILATION PLAN, LEGEND AND GENERAL NOTES
3	A-2	ROOF PLAN - DEMOLITION
4	A-3	ROOF PLAN - NEW CONSTRUCTION
5	A-4	DETAILS
6	A-5	DETAILS
7	A-6	DETAILS

NOTE: CONTRACTOR AND TRADES TO REFER TO ENTIRE SET OF DRAWINGS AND SPECIFICATIONS FOR SCOPE OF WORK. DUE TO RENOVATION, NOTES AND DETAILS ARE NOTED THROUGHOUT THE SET.